DOWNLOAD MULTILINGUAL USER MANUAL

code.ironbaltic.com/u/NMwhwOYk

WOOD CHIPPER

Code 76.7000

Version 07082026

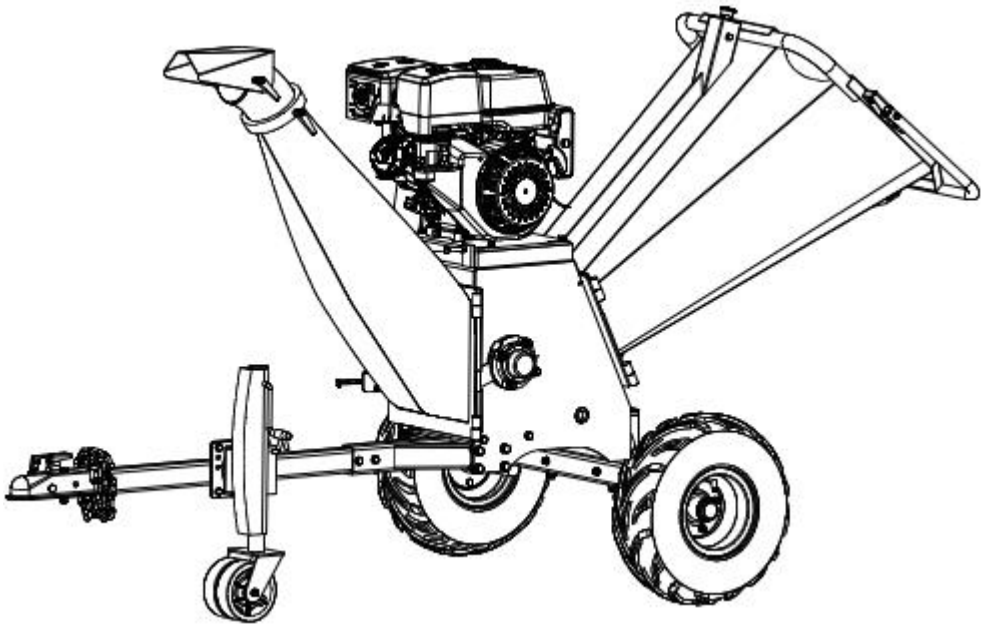

Keep this manual for future reference!

If you need any spare parts, please send this packaging data to your local dealer or to Iron Baltic sales@ironbaltic.com

76.7000 Wood chipper

CONTENTS

EC DECLARATION OF CONFORMITY 5
INTRODUCTION 6
GENERAL 7
- ENGINE MANUAL 7
- EMISSION CONTROL SYSTEM 7
- ENVIRONMENTAL 7
- MODEL AND SERIAL NUMBERS 7
- DISCLAIMER 7

SAFETY INSTRUCTIONS 8
- UNDERSTAND YOUR MACHINE 8
- PERSONAL SAFETY 8
- INSPECT YOUR MACHINE 8
- ENGINE SAFETY 9
- FUEL SAFETY 9
- PRIOR TO STARTING 9
- OPERATION SAFETY 10
- FEEDING MATERIALS 10
- UNCLOGGING 10
- MOVING 10
- MACHINE USE AND CARE 11
- MAINTAINING YOUR MACHINE 11

SAFETY LABELS 12
PRODUCT DESCRIPTION 14
OPERATION 15
- ADD OIL TO ENGINE 15
- ADD GASOLINE TO ENGINE 15
- STARTING ENGINE 16
- OPERATING 17
- IDLE SPEED 18
- STOP ENGINE 18
- TRANSPORTING 18

KNOW YOUR MACHINE 19
SPECIFICATION 20
ASSEMBLING GUIDE 21
MAINTENANCE 26
- PREVENTIVE MAINTENANCE 26
- REGULAR MAINTENANCE CHECKLIST 26
- GREASING 26
- CHECK CUTTING DISK 26

KNIFE AND WEAR PLATE INSPECTION 27
STORAGE 27
TROUBLESHOOTING 29
SPARE PARTS REPLACEMENT 30
BELTS AND CLUTCH REPLACEMENT 30
KNIVES AND WEAR PLATE REPLACEMENT 34
PARTS LIST 39

Iron Baltic OÜ

EC DECLARATION OF CONFORMITY

Manufactured by:	Weifang Austter Industry and Trade Co., Ltd.
Address:	East Mountain Industrial Park, Shuangfeng Avenue, Xing'an Street, AnQiu, Weifang City, Shandong Province 262100, P. R. China
Agent:	Iron Baltic OÜ
Adress:	Põldmäe tee 1, Vatsla 76915, Estonia
Product:	Code: **76.7000** Type: **Wood chipper** Type: **P4206**

We certify that the product complies with the requirements of Directive **2006/42/EC** relating to the safety and functionality of the machinery, Directive **2000/14/EC** relating to the noise emission in the environment and is in compliance with the requirements of applicable standards: **EN ISO 12100:2010; EN 13525:2020; EN ISO 14982:2009.**

In witness whereof CE marking is attached to the product.

Notified body:	TÜV Rheinland/CCIC (Qingdao) Co., Ltd.
Adress:	6F, No.2 Bldg., No.175 Zhuzhou Road, Qingdao 266101, P.R. China

Measured sound power level:	**112 dB**
Applicable conformity assessment procedure:	**EN ISO 4871:2009.**

Place and date of issue of the declaration: 08.02.2023

.....
Tiit Norak
Iron Baltic OÜ
Member of the Board

INTRODUCTION

Thank you for choosing this product. This manual provides instructions on the safe operation and maintenance of the wood chipper. This machine is designed solely to chip wood and must not be used for any other purpose. The non-intended use of the wood chipper may cause economic loss and cause injuries; hence it is very important that the person who uses the product, reads this manual carefully and uses the product accordingly. It is potentially hazardous to fit or use any parts other than your dealer parts. Any misuse of the product releases the manufacturer from the responsibility for occurred damage and compensation of costs.

NOTE: We reserve the right to discontinue, change, and improve products at any time without notice or obligation to the purchaser. The descriptions and specifications contained in this manual were in effect at printing. Equipment described within this manual may be optional. Some illustrations may not be applicable to your machine.

This symbol is used throughout the manual and on warning signs in order to warn users of the potential for serious injury. Before using the wood chipper, carefully read the safety instructions and make sure that you have understood them. Follow all instructions and ensure that everyone who uses the equipment follows them!

Keep this manual for future reference.

Based on the specifications for your model, please check that you have received all of the parts for your particular set.

GENERAL

This unit is a gasoline engine driven Wood Chipper. It is designed to cut wood into chips. It offers quality solid steel construction and is easy and safe to operate. With proper use and care, it should give you many years of dependable service.

ENGINE MANUAL

The **Engine Manufacturer** is responsible for all engine-related issues with regards to performance, power rating, specifications, warranty and service. Please refer to the **Engine Manufacturer's** owner/operator's manual, packed separately with your unit, for more information.

EMISSION CONTROL SYSTEM

This equipment and or its engine may include exhaust and evaporative emission control system components required to meet U.S. Environmental Protection Agency (EPA) and/or California Air Resources Board (CARB) regulations. Tampering with emission controls and components by unauthorized personnel may result in severe fines or penalties. Emission controls and components can only be adjusted by an authorized engine manufacturer's service center.

ENVIRONMENTAL

Recycle unwanted materials instead of disposing of them as waste. All tools, hoses and packaging should be resorted, taken to the local recycling center and disposed of in an environmentally safe way.

MODEL AND SERIAL NUMBERS

Record the model and serial number as well as date and place of purchase for future reference. Have this information available when ordering parts or optional accessories and when making technical or warranty inquiries.

DISCLAIMER

Wood Chipper manufacturer reserves the right to discontinue, change, and improve its products at any time without notice or obligation to the purchaser. The descriptions and specifications contained in this manual were in effect at printing. Equipment described within this manual may be optional. Some illustration may not be applicable to your unit.

SAFETY INSTRUCTIONS

Most accidents occur due to negligence or carelessness. Avoid unnecessary accidents and follow the safety instructions given below.

List of warnings and cautions cannot be all-inclusive. If situations occur that are not covered by this manual, the operator must apply common sense and operate this WOOD CHIPPER in a safe manner. Contact dealer for assistance in your area.

Identify hazards and take preventive steps to avoid accidents and minimize risk. Possible hazards include, but are not limited to, moving parts, thrown objects, weight of the machine and components, and the operating environment.

UNDERSTAND YOUR MACHINE

- Read this manual and labels affixed to the machine to understand its limitations and potential hazards.
- Be thoroughly familiar with the controls and their proper operation. Know how to stop the machine and disengage the controls quickly.
- Make sure to read and understand all the instructions and safety precautions as outlined in the Engine Manufacturer's manual packed separately with your unit.
- Do not attempt to operate the machine until you fully understand how to properly operate and maintain the engine and how to avoid accidental injuries and/or property damage.
- If the unit is to be used by someone other than original purchaser or loaned, rented, or sold, always provide this manual and any needed safety training before operation. The user can prevent and is responsible for accidents or injuries that may occur to themselves, other people, and property.
- Do not force the machine. Use the correct machine for your application. The correct machine will do the job more efficiently and safer at the rate it was designed.

PERSONAL SAFETY

- Do not permit children to operate this machine at anytime.
- Keep children, pets, and other people not using the unit away from the work area.
- Be alert and shutoff unit if anyone enters work area. Keep children under the watchful care of a responsible adult.
- Do not operate the machine while under the influence of drugs, alcohol, or any medication that could affect your ability to use it properly.
- Dress properly. Wear heavy long pants, boots, and gloves. Do not wear loose clothing, short pants, or jewelry of any kind - can be caught in moving parts.
- Secure longhair so it is above shoulder level. Keep your hair away from moving parts.
- Protect eyes, face, and head from objects that may be thrown from the unit. Always wear safety goggles or safety glasses with side shields when operating.
- Wear appropriate hearing protection.
- Always keep hands and feet away from all moving parts during operation. Moving parts can cut or crush body parts.
- Always keep hands and feet away from all pinch points.
- Do not touch parts that might be hot from operation. Allow parts to cool before attempting to maintain, adjust, or service.
- Stay alert, watch what you are doing, and use common sense when operating the machine.
- Do not overreach. Do not operate the machine while barefoot or when wearing sandals or similar lightweight footwear.
- Wear protective footwear that will protect your feet and improve your footing on slippery surfaces.
- Keep proper footing and balance at all times. This enables better control of the machine in unexpected situations.

INSPECT YOUR MACHINE

- Check your machine before starting it.
- Keep guards in place and in working order.
- Make sure all nuts, bolts, etc., are securely tightened.
- Never operate the machine when it is in need of repair or is in poor mechanical condition.
- Replace damaged, missing, or failed parts before using it.
- Check for fuel leaks.
- Keep the machine in safe working condition.
- Do not use the machine if the engine's switch does not turn it on or off. Any gasoline powered machine that can't be controlled with the engine switch is dangerous and must be replaced.
- Regularly check to see that keys and adjusting wrenches are removed from the machine area before starting it. A wrench or a key that is left attached to a rotating part of the machine may result in personal injury.

- Avoid accidental starting. Be sure the engine's switch is off before transporting the machine or performing any maintenance or service on the unit.
- Transporting or performing maintenance or service on a machine with its switch on can lead to accidents.
- If the machine should start to vibrate abnormally, stop the engine (motor) and check immediately for the cause. Vibration is generally a warning sign of trouble.

ENGINE SAFETY

- This machine is equipped with an internal combustion engine.
- Do not use on or near any unimproved, forest covered, or brush covered land unless the exhaust system is equipped with a spark arrester meeting applicable local, state, or federal laws.
- A spark arrester, if used, must be maintained in effective working order by the operator.
- Never start or run the engine inside a closed area. The exhaust fumes are dangerous, containing carbon monoxide, an odorless and deadly gas.
- Operate this unit only in a well-ventilated outdoor area.
- Do not tamper with the engine to run it at excessive speeds. The maximum engine speed is preset by the manufacturer and is within safety limits (see engine manual).
- Keep a Class B fire extinguisher on hand when operating this Wood chipper in dry areas as a precautionary measure.

FUEL SAFETY

- Fuel is highly flammable, and its vapors can explode if ignited.
- Take precautions when refueling to reduce the chance of serious personal injury.
- When refilling or draining the fuel tank, use an approved fuel storage container while in a clean, well-ventilated outdoor area.
- Do not smoke, or allow sparks, open flames, or other sources of ignition near the area while adding fuel or operating the unit.
- Never fill the fuel tank indoors.
- Keep grounded conductive objects, such as tools, away from exposed, live electrical parts and connections to avoid sparking or arcing. These events could ignite fumes or vapors.
- Always stop the engine and allow it to cool before filling the fuel tank.
- Never remove the cap of the fuel tank or add fuel while the engine is running or when the engine is hot.
- Do not operate the machine with known leaks in the fuel system.
- Loosen the fuel tank cap slowly to relieve any pressure in the tank.
- Never overfill the fuel tank. Fill the tank to no more than 1/2" below the bottom of the filler neck to provide space for expansion as the heat of the engine can cause fuel to expand.
- Replace all fuel tank and container caps securely and wipe up spilled fuel. Never operate the unit without the fuel cap securely in place.
- Avoid creating a source of ignition for spilled fuel. If fuel is spilled, do not attempt to start the engine but move the machine away from the area of spillage and avoid creating any source of ignition until fuel vapors have dissipated.
- When fuel is spilled on yourself or your clothes, wash your skin and change clothes immediately.
- Store fuel in containers specifically designed and approved for this purpose.
- Store fuel in a cool, well-ventilated area, safely away from sparks, open flames, or other sources of ignition.
- Never store fuel or a machine with fuel in the tank inside a building where fumes may reach a spark, open flame, or any other source of ignition, such as a water heater, furnace, or clothes dryer.
- Allow the engine to cool before storing in any enclosure.

PRIOR TO STARTING

- Thoroughly inspect the area in which you are working, keeping it clean and free of debris to prevent tripping.
- Operate on a flat level ground.
- Make sure the feed chute and cutting housing are empty and free of all debris.
- Check the oil level.
- Make sure all nuts and bolts are tight.
- Check the air pressure in the tires.
- Keep your face and body back from the chipper hopper and discharge chute to avoid injury from accidental bounce back of material.
- Never reach with your hands inside the feed chute past the rubber flap while operating the machine.
- Keep combustible substances away from the engine when it is hot.
- Do not tilt the machine while the engine is running.
- Never operate this machine without the feed chute or discharge chute properly attached.

OPERATION SAFETY

- Never place any part of your body where it would be in danger if movement should occur during assembly, installation, operation, maintenance, repair, or moving.
- Keep all bystanders and pets at least 23 meters / 75 feet away. If you are approached, stop the unit immediately.
- Never place your hands, feet, or any part of your body in the chipper hopper, discharge opening, or near or under any moving part while the machine is running.
- Keep the area of discharge clear of people, animals, buildings, glass, or anything else that will obstruct clear discharge, causing injury or damage.
- Wind can also change discharge direction, so be aware.
- If it becomes necessary to push materials to the chipper hopper, use a small-diameter stick, not your hands.

Operating zone

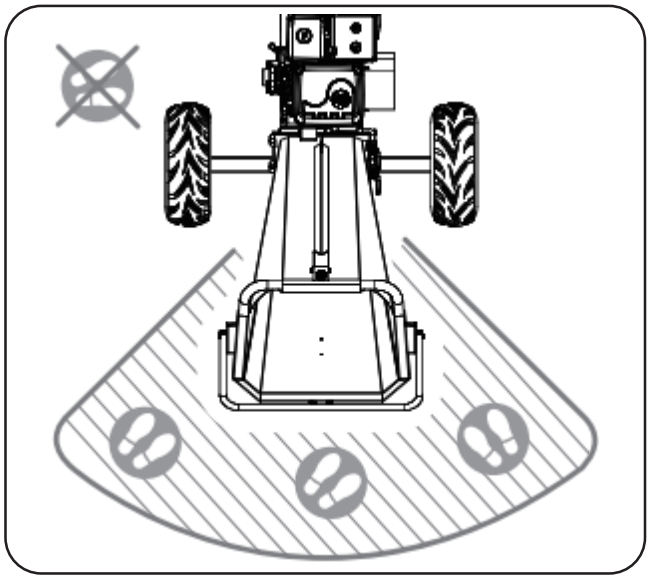

FEEDING MATERIALS

- Feed only clean materials into the machine.
- Foreign matter such as soil, sand, grit, stones, pieces of metal, etc. Will damage the sharp edge of the cutting knives. Root balls and dead wood will also dull the blades quickly.
- Avoid feeding pine needles, flax and cabbage tree leaves into the machine; these stringy materials can wrap around the rotor shaft and work their way into the bearing.
- Avoid feeding short, stubby pieces of wood into the machine - they tend to bounce and spin in the feed chute. Feed these short pieces together with longer pieces.
- This machine is self-feeding, do not force branches into the blades. Allow the machine to automatically feed through. Allow time for the machine to reach the highest spinning revolutions before feeding the next load of branches.

UNCLOGGING

- Never allow processed material to build up in the discharge area. This can prevent proper discharge and result in kickback from the chipper hopper.
- Never attempt to unclog either the feed chute or discharge chute while the engine is running. Immediately shut off the engine, allow the cutting disk to come to a complete stop, and then remove the clogged material. Inspect for damage and check for any loose parts for repair or replacement.
- Whenever you leave the operating position or if you have to remove processed material, leaves, or debris from the machine, always shutdown the engine, and ensure the engine is switched to"off" to prevent accidental starting, and wait for all moving parts to come to a complete stop.
- Before opening the cutting disk housing,always make sure the engine is switched off, the cutting disk is at a complete standstill.

MOVING

- Move the machine at least 3 meters / 10 feet away from the refueling point before starting engine.
- This chipper shredder is for off road use only. Never attempt to tow the machine on public highways, roads or thoroughfares.
- Always stop the engine before moving the machine and watch out for sharp objects that could pierce the tires.

MACHINE USE AND CARE

- Position the machine in such a way that it can not move during maintenance, cleaning, adjustment, assembly of accessories or spare parts, as well as under storage.
- Do not change the engine governor settings or over-speed the engine. The governor controls the maximum safe operating speed of the engine.
- Do not run the engine at a high speed when you are not working.
- Do not put hands or feet near rotating parts.
- This machine has two rotating cutting knives capable of amputating hands and feet and throwing objects. Keep hands and feet out of openings while machine is running. Failure to observe these safety instructions could result in serious injury or death.
- Avoid contact with hot fuel, oil, exhaust fumes and hot surfaces.
- Do not touch the engine or muffler. These parts get extremely hot from operation. They remain hot for a short time after you turn off the unit.
- Allow the engine to cool before doing maintenance or making adjustments.
- If the machine should start to make an unusual noise or vibration, immediately shut off the engine, disconnect the spark plug wire and check for the cause. Unusual noise or vibration is generally a warning of trouble.
- Use only attachments and accessories approved by the manufacturer. Failure to do so can result in personal injury.
- Keep the engine and muffler free of grass, leaves, excessive grease or carbon build up to reduce the chance of a fire hazard.
- Never douse or squirt the unit with water or any other liquid. Keep handles dry, clean and free from debris. Clean after each use.
- Observe proper disposal laws and regulations for gas, oil, etc. to protect the environment.
- When storing the machine, ensure it is out of the reach of children. Do not allow individuals who are unfamiliar with the machine or these instructions from operating it. This machine can be dangerous when used by an untrained user.

MAINTAINING YOUR MACHINE

- Some parts of this machine are made of plastic or rubber and should be kept away from chemicals.
- Never cover the machine while the muffler is still hot.
- Do not alter or adjust any part of the chipper shredder or its engine that is sealed by the manufacturer or distributor. Only a qualified service technician may adjust parts that increase or decrease governed engine speed.
- To maintain your machine, check for any misalignment or binding of any moving parts. Parts that are broken or worn down that may affect the machine's operation should be replaced before use. Many accidents are caused by poorly maintained equipment.

IF ANYTHING THAT MIGHT DAMAGE EQUIPMENT HAPPENS DURING OPERATION, THE EQUIPMENT MUST BE INSPECTED TO DETECT AND ASSESS POSSIBLE DAMAGES. DAMAGES (FRACTURES IN THE STRUCTURE OR WELD, DEFORMED DETAILS) MAY HARM PROPERTY AND HEALTH OF PEOPLE. DO NOT CONTINUE OPERATING THE EQUIPMENT BEFORE ELIMINATION OF DAMAGES.

SAFETY LABELS

The warning labels shall be present on your wood chipper. These represent important information about the product or instructions on its use. If any of these labels is missing or damaged, contact the dealer of the wood chipper to replace the missing labels with new ones.

MEANING OF WARNING LABELS

	Read these instructions for use carefully.
	Wear eye protection. Wear hearing protection.
	Wear protective gloves.
	Wear safety footwear.
	Do not remove or tamper with the protection and safety devices.
	Do not touch parts which are hot from operation. Serious burns may result.
	No smoking, No sparks, No flames.
	Keep your hand and feet away from moving parts.
	Thrown Objects.
	Besure the engine's switch is off before transporting the machine or performing any maintenance.
	Keep bystanders away.

DANGER

- Read and understand the operator's manual before starting and using unit.
- Keep all shields and guards in place and securely attached.
- Keep hands, feet, face, clothing and long hair away from in-feeding chute, and discharge chute while the engine is running. Rotating cutting blades inside these openings can cause serious personal injury. Material being processed may bounce back from inlet openings or be thrown from the discharge chute. Long hair or loose clothing may be pulled or sucked into the inlet openings.

WARNING

DO NOT place wood or branches over 15cm in diameter into the in-feeding bin. The blades may get stuck or jammed.

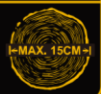

- If the chipper jams or becomes clogged, immediately shut off the engine and wait for all moving parts to come to a complete stop before clearing.
- If engine is stucked because of a jam, move throttle control lever to stop position or shut off rocker to "O" if equipped before clearing.
- Do not install, remove,adjust,or service the discharge screen or any other part while the engine is running. Blade contact can occur.
- Do not operate on uneven ground where unit is unstable.
- To avoid a fire hazard,keep leaves,grass, and other combustible materials away from hot engine and muffler.
- Keep children and others away from area of operation.
- Do not operate on pavement, gravel or other hard surfaces since objects can ricochet and cause injury.
- Wear approved safety glasses,gloves and ear protection.

DANGER

- Read and understand the operator's manual before starting and using unit.
- Keep all shields and guards in place and securely attached.
- Keep hands, feet, face, clothing and long hair out of infeed bin, and discharge chute while the engine is running. Rotating cutting blades inside these openings can cause serious personal injury. Material being processed may bounce back from inlet openings or be thrown from the discharge chute. Long hair or loose clothing may be pulled or sucked into the inlet openings.
- If the chipper jams or becomes clogged, immediately shut off the engine and wait for all moving parts to come to a complete stop before clearing.
- If engine stalls because of a jam, move throttle control lever to stop position or shut off rocker to "0" if equipped before clearing.
- Do not install, remove, adjust, or service the discharge screen or any other part while the engine is running. Blade contact can occur.
- Do not operate on uneven ground where unit is unstable.
- To avoid a fire hazard, keep leaves, grass, and other combustible materials away from hot engine and muffler.
- Keep children and others away from area of operation.
- Wear approved safety glasses, gloves and ear protection.
- Do not operate on pavement, gravel or other hard surfaces since objects can ricochet and cause injury.

WARNING

DO NOT place wood or branches over 15cm in diameter into the in-feeding bin. The blades may get stuck or jammed.

PRODUCT DESCRIPTION

Wood chipper is a compact product with a simple design, suitable for chipping smaller diameter (up to 150 mm) wood. Wood chips can be used for road covering, mulching, heating or other applications.

The wood chipper is easy to transport with any vehicle equipped with a 50 mm / 2" hitch ball and is suitable for small-scale forest work, park, and property maintenance. The compact size of the chipper ensures that when attached to an ATV or UTV, it is easy to manoeuvre in between trees and other hard to reach places and the light weight of the rig does not damage the environment.
The wood Chipper is equipped with 420 cc Briggs & Stratton 2100 XR Professional Series engine with 13,5 HP.

Engine	Briggs & Stratton
Displacement	420 cc
Net power	13,5 HP
Chipping Capacity	150 mm / 6 inch
Weight	255 kg
Length	2700 mm
Width	1218 mm
Height	1424 mm
Blade material	A8
Start	E-start; 12V 20Ah Lead-acid battery
Discharge chute	360 degrees adjustable
Towing	50 mm Coupler hitch; Double jockey wheel
Wheel	19x7.00-8 Tubeless tire
Roller diameter	350 mm
Drive	Kevlar belt, centrifugal clutch
Package size	1080x780x1270 mm
Gross weight	276 kg

Table 1: Technical specification of the Wood Chipper

OPERATION

ADD OIL TO ENGINE

1. Make sure the chipper shredder is on a flat, level surface.
2. Remove the oil fill cap/dipstick to add oil.
3. Using a funnel, add oil up to the FULL mark on the dipstick. (See engine manual for oil capacity, oil recommendation, and location of fill cap.).

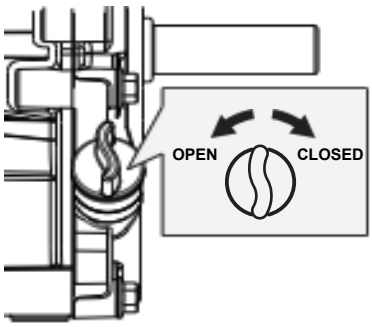

ADD GASOLINE TO ENGINE

!! DO NOT OVERFILL !!

This equipment and/or its engine may include evaporative emissions control system components, required to meet EPA and/or CARB regulations, that will only function properly when the fuel tank has been filled to the recommended level. Overfilling may cause permanent damage to evaporative emissions control system components. Filling to the recommended level ensures a vapor gap required to allow for fuel expansion. Pay close attention while filling the fuel tank to ensure that the recommended fuel level inside the tank is not exceeded. Use a portable gasoline container with an appropriately sized dispensing spout when filling the tank. Do not use a funnel or other device that obstructs the view of the tank filling process.

Fill the fuel tank outdoors, never indoors. Gasoline vapors can ignite if they collect inside an enclosure. Explosion can result.

Gasoline is highly flammable and explosive. You can be burned or seriously injured when handling fuel. Use extreme care when handling gasoline.

1. The engine must be off and allowed to cool at least two minutes before adding fuel.
2. Remove the fuel filler cap and fill the tank. (See engine manual for fuel capacity, fuel recommendation, and location of fuel cap.)
3. Reinstall the fuel cap and tighten. Always clean up spilled fuel.

STARTING ENGINE

1. Position your Wood Chipper on flat, dry ground, and then stop the wheel with chocks, make sure the machine cannot move.
2. Move the engine switch to the ON position.

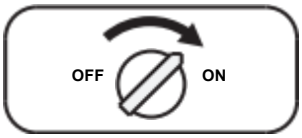

3. Open the fuel shut-off valve.

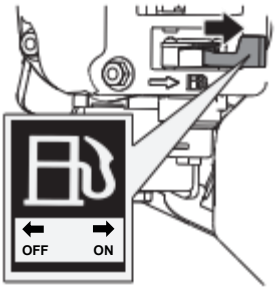

4. Move the choke lever to the CLOSED position.
   NB! If the engine is hot, closing the choke is not necessary.

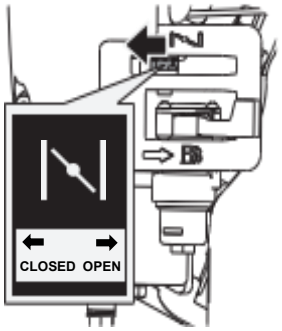

5. Move the throttle lever slightly to the FAST speed.

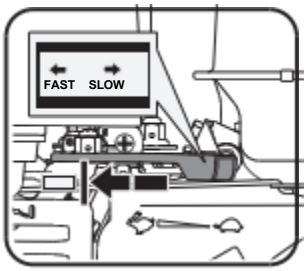

6. Start the engine using the pullstart or electric start.

   ⇨ Pullstart – Pull the recoil starter until engine compression has become difficult to pull. Let the recoil return to the home position, then pull quickly to start the engine. Repeat steps as needed. Fully open the choke and set the throttle to the FAST position, before operating the unit.

Rapid retraction of the starter cord (kickback) will pull your arm toward the engine faster than you can let go. Broken bones, fractures, bruises, or sprains could result.

   ⇨ Electric start – Connect the extension cable or battery cable to the plug (see page 24). Turn the key to the right and hold until the engine starts. If the engine doesn't start after 10 seconds, wait about 15-20 second and try to start again. Let the engine warm up few seconds at idle speed, then open the choke and set the throttle to the FAST position, before operating the unit.

OPERATING

After the engine warms up, pull the throttle lever to accelerate engine speed.

The chipper shredder can process a wide variety of dry or green organic materials such as branches, stalks, vines, leaves, roots, and vegetable matter. The maximum capacity is 150 mm / 6-inch diameter branches, this can vary depending on the type and hardness of wood. Rotating the branch as you feed it into the machine will improve performance.

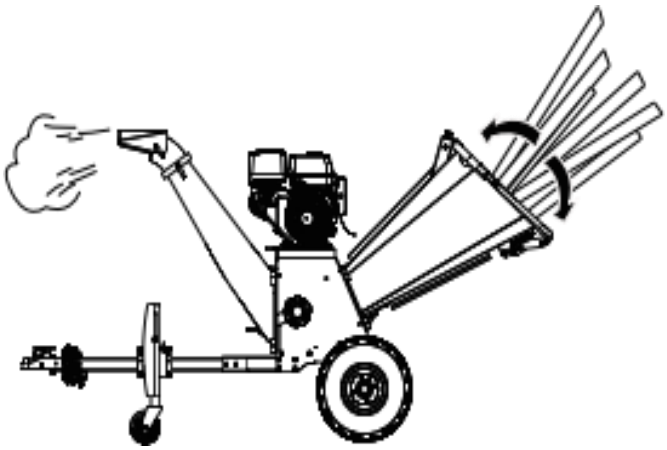

Feed the tree trunk through with the straight end first, leaving the bushy head on. This helps guide the tree trunk down the feed chute and reduces spinning and bouncing of small pieces back up the feed chute. Some side branches may require pre-cutting so that the branch will self-feed more efficiently. It is always advisable to process freshly cut materials.

While operating the machine, keep a wooden stick handy, approximately 25 mm / 1 inch in diameter by 610 mm / 2 feet long. This stick will be useful to push in short, brushy and very leafy materials and keep the feed chute clear.

Do not force material into the machine. If it does not chip well, the chipper knives may need sharpening or to be replaced, or the gap between the knives and the wear plate needs adjusting.

Do not overload the machine by feeding too much material into the feed chute at one time. If you hear the speed of the engine decreasing, immediately stop feeding material into the machine. Do not resume feeding material into the machine until the engine has returned to full speed.

The wood chipper can clog up with soft, wet, or fibrous materials. However, if you feed soft materials intermittently with branches, there should be no problem, as the wood chipper tends to clean out any residue left in the machine.

If any stringy material wraps around the rotor shaft, remove it before it works its way into the bearing.

If the chipper shredder stalls from overloading or clogging, turn off the engine's power switch and wait until the cutting disk is completely stopped. Allow the engine to completely cool and switch the engine to off. Open the housing cover to clear and remove all the materials from the housing. Lock the housing cover, switch the engine to the on position, and start the machine again to resume operation.

As the discharge material piles up, move the chipper away from the pile. This will keep the material from backing up the discharge chute. Do not position the deflector vertically, as this will reduce the airflow, impeding the discharge and causing blockage.

Make sure the machine is level and stable to avoid unnecessary vibrations.

Do not open the housing cover unless the engine and cutting disk are completely stopped.

The engine is fitted with an oil alert and will not start if the oil level in the sump is too low. It may also stop if it is operated on a steep slope.

To shut down the machine, move the throttle control lever to idle speed, turn the engine switch to the OFF position, and it will gradually come to a standstill.

IDLE SPEED

Set the throttle control lever to the SLOW position to reduce stress on the engine when chipping is not being performed. Lowering the engine speed will help extend the life of the engine, as well as conserve fuel and reduce noise level.

STOP ENGINE

To stop the engine in an emergency, simply turn the engine switch to the OFF position or push emergency stop button. Under normal conditions, use the following procedure:

1. Move the throttle lever to the SLOW ( ) position.
2. Let the engine idle for one or two minutes.
3. Turn the engine switch to the OFF position.
4. Turn the fuel valve lever to the OFF position.

Wait until the machine completely stops. Allow the engine to completely cool. Remove the engine's spark plug. Then clean out the interior of the machine and its discharge chute.

Sudden stopping at a high speed under a heavy load is not recommended. Engine damage may result.

Do not move the choke control to CLOSE to stop the engine. Backfire or engine damage may occur.

TRANSPORTING

Your wood chipper is equipped with two large pneumatic wheels for easy movement by hand. To move the unit, grip the handles and tilt the wood chipper slightly after making sure the oil tank cover is tightened.

KNOW YOUR MACHINE

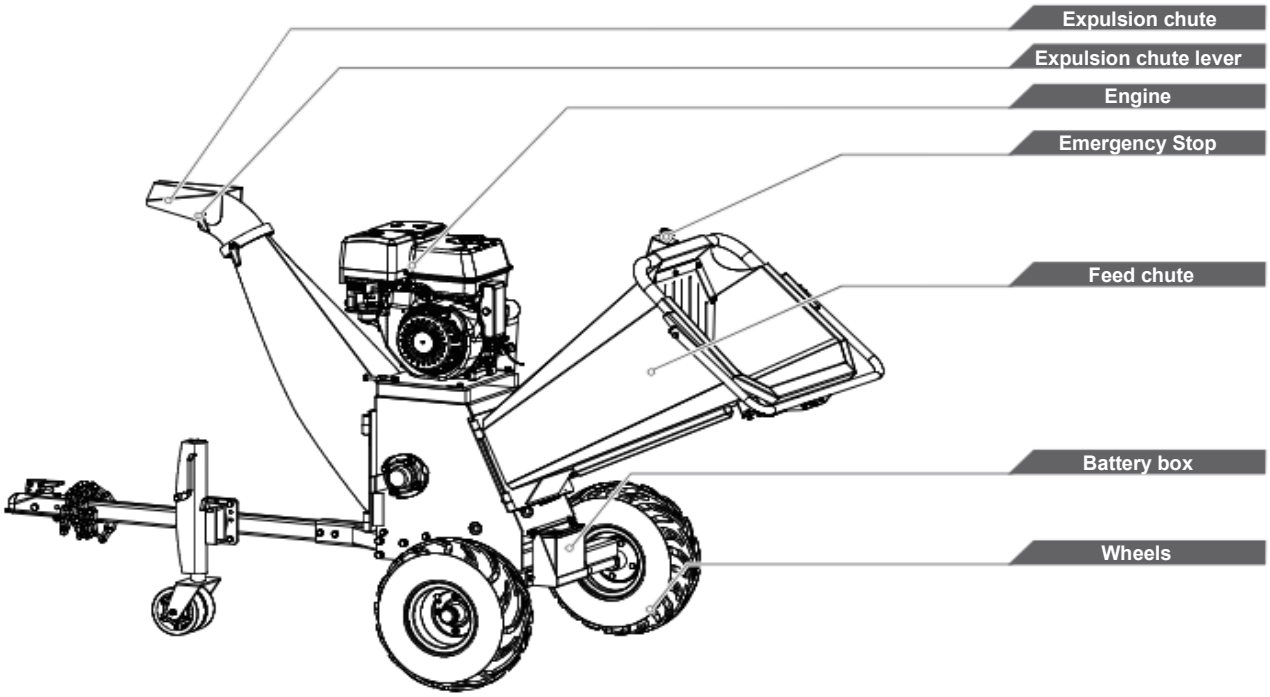

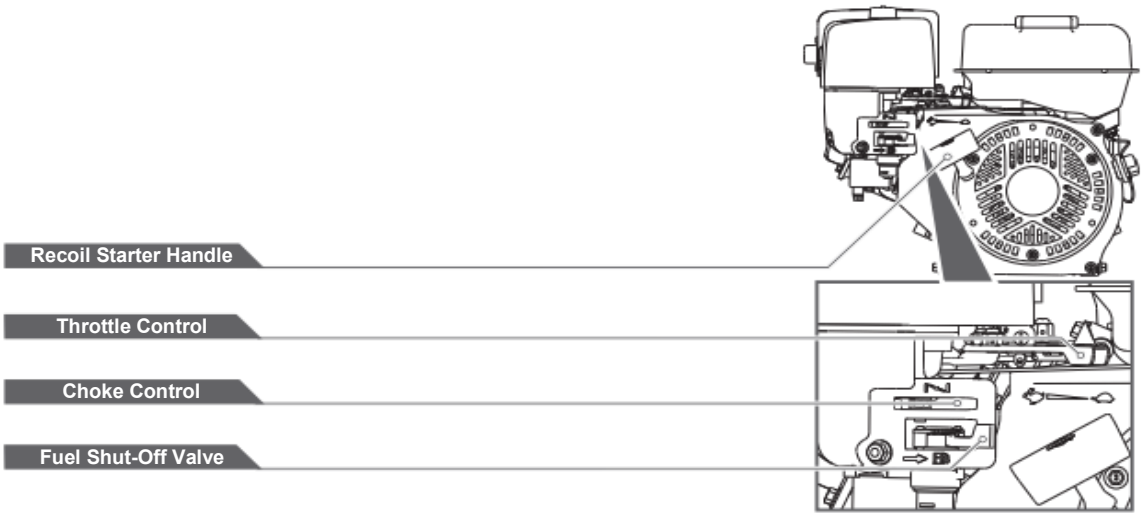

- Feed chute ⟶ The feed chute is where you insert your materials to be chipped.
- Discharge chute ⟶ Chipped materials are discharged through this opening. The deflector can be adjusted.
- Grip handles ⟶ The handles are used to move the unit.
- Transport wheels ⟶ To move the wood chipper, grip the handles located on the top of the opening of the hopper and tilt the machine back until it is fully resting on the tires.
- Expulsion chute lever ⟶ Loosen the deflector lever in a counter-clockwise direction to adjust the discharge angle. Turn it clockwise to tighten.
- Engine ON/OFF switch ⟶ The engine switch has two positions. OFF - engine will not start or run.
  ON - engine will start and run.
- Recoil starter handle ⟶ The handle is used to start the engine.
- Fuel shut-off valve ⟶ CLOSED - use this position to service, transport, or store the unit.
  OPEN - use this position to run the unit.
- Choke control ⟶ The choke control is used to choke the carburetor and assist in starting the engine. The choke control slides between the CHOKE CLOSED and CHOKE OPEN positions.
- Throttle control ⟶ The throttle control regulates the speed of the engine and will shut-off the engine when it is moved to the STOP position. The throttle control moves between FAST , SLOW , and STOP positions.

SPECIFICATION

Pos.	Description	Amount
1	Engine and drum (main machine)	1
2	Discharge chute	1
3	Feed chute	1
4	360 degree upper expulsion chute	1
5	Battery box	1
6	Tower bar mount	1
7	Towbar and support wheel	1
8	Wheels	1
9	Axle	1
10	Hex bolt M10x25	8
11	Hex bolt M10x70	2
12	Hex bolt M10x80	2
13	Hex bolt M12x35	8
14	Hex bolt M14x140	2
15	Spring washer Ø12	8
16	Flat washer Ø10	16
17	Flat washer Ø12	8
18	Flat washer Ø14	4
19	M10 lock nuts	12
20	M14 lock nuts	2
21	Power cable (battery-plug) (IB-1)	1
22	Extension cable (plug-plug) (76.7020)	1
23	Battery cable (plug-terminal) (76.7030)	1
24	Cable tie 4,7x366 (PM.11.00.009)	5

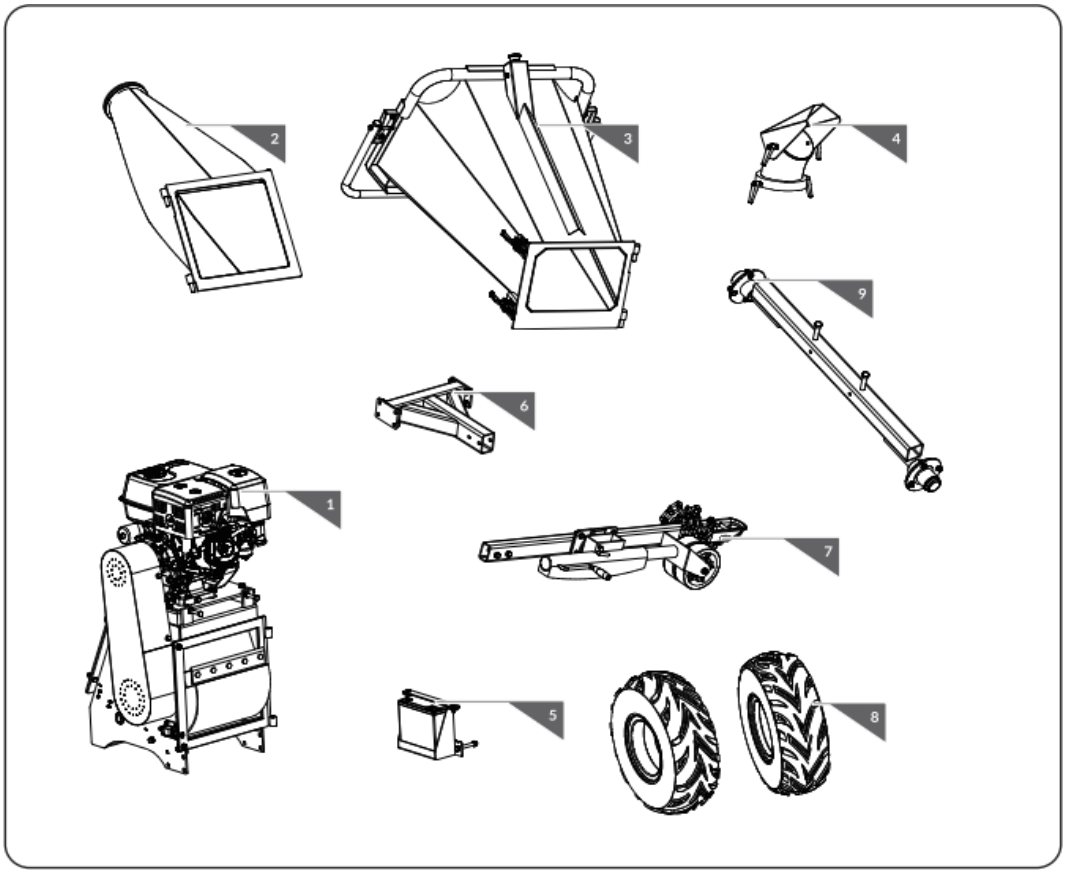

ASSEMBLING GUIDE

Step 1

Use scissors or a knife to cut and remove the straps. Remove the wooden plate in the top. At least two people lift the package and move it from the top.

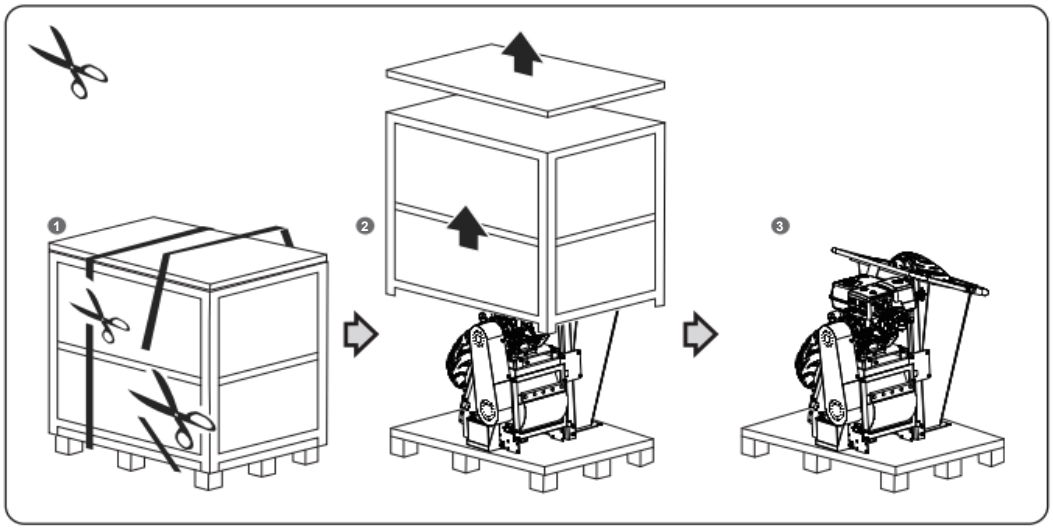

Step 2

Loosen the upper expulsion chute lever in counter-clockwise direction to adjust the angle. Tighten it in the clockwise direction.

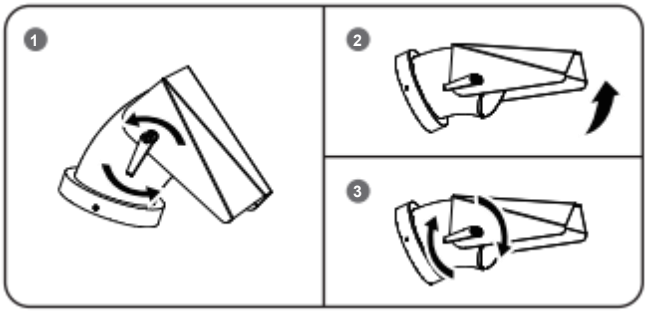

Step 3

Attach the wheel axle to the cutter base with M14x140 hex bolts, flat washer 14 and M14 lock nuts.

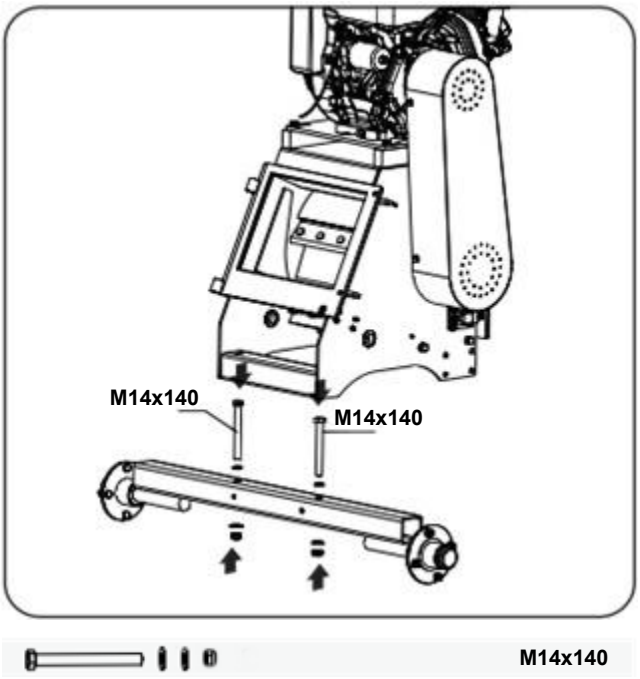

Step 4 Attach the wheels to the wheel axles with M10x25 hex bolts, M10 lock nuts and flat washer 10.

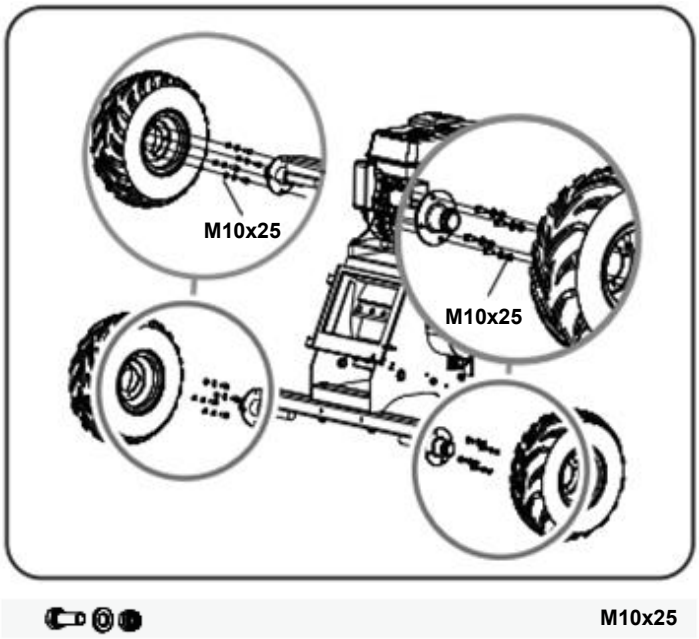

Step 5 Attach the towbar mount to the base frame with M12x35 hex bolts, spring washer 12 and flat washer 12. If at first the towbar does not fit, then loosen two bolts on the side of the base frame (near the towbar holes).

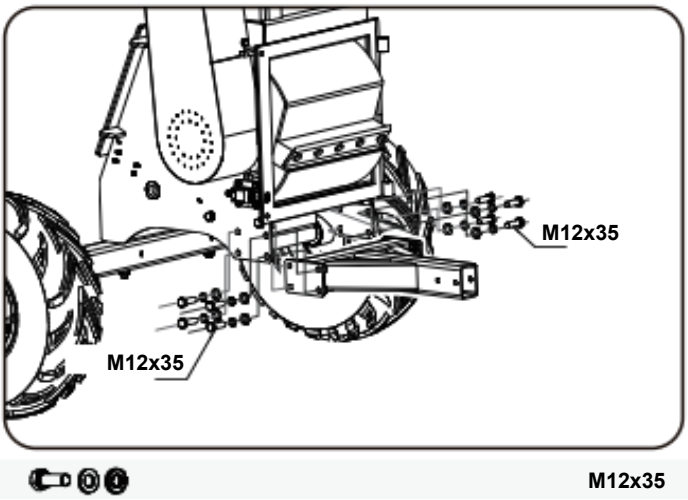

Step 6 Attach the towbar to the towbar mount with M10x70 hex bolts, M10 lock nuts and flat washer 10.

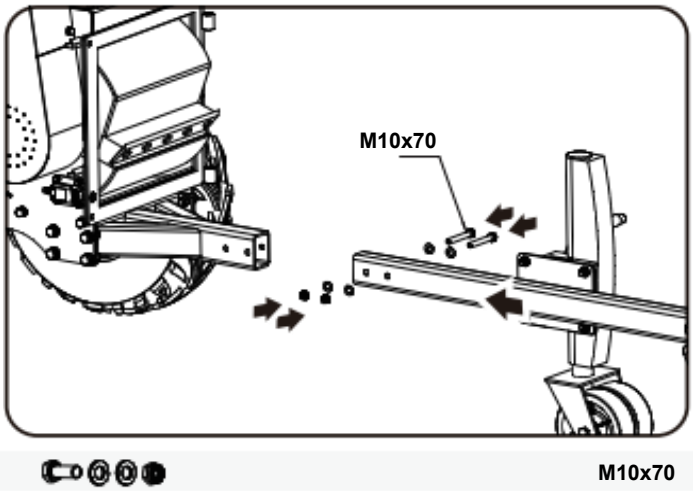

Step 7 Attach the discharge chute to the cutter and lock with latches.

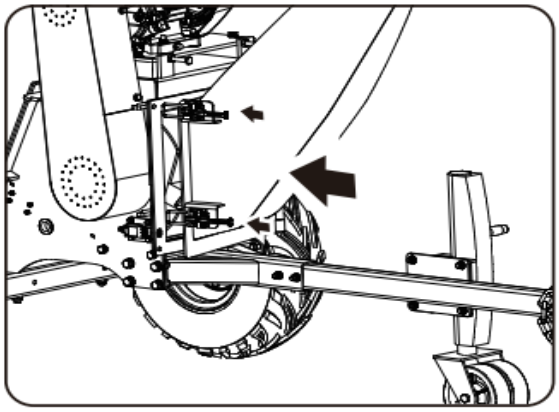

Step 8 Attach the upper expulsion chute to the discharge chute with adjustable locking handle.

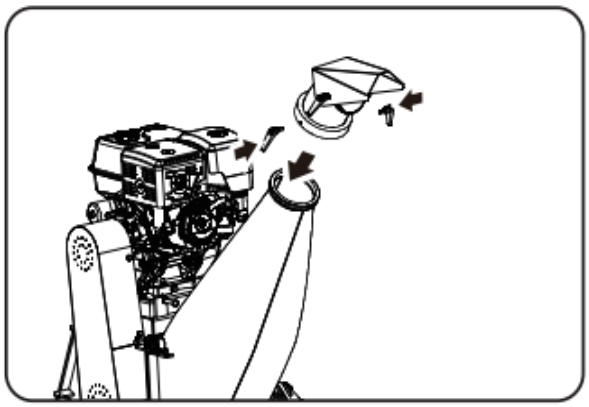

Step 9 Attach the battery box to the wheel axle with M10x80 hex bolts, M10 lock nuts and flat washer 10.

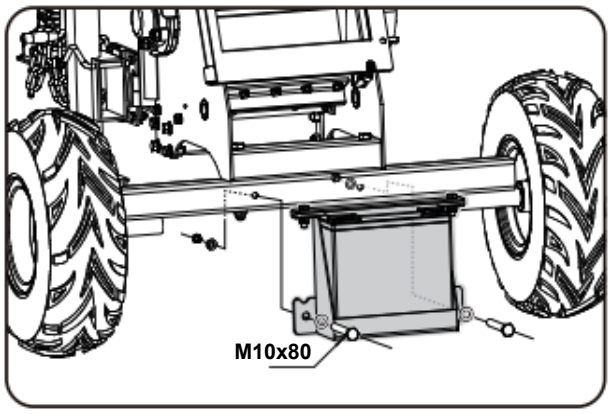

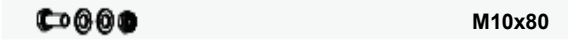

Step 10 Attach the feed chute to the cutter and lock with latches.

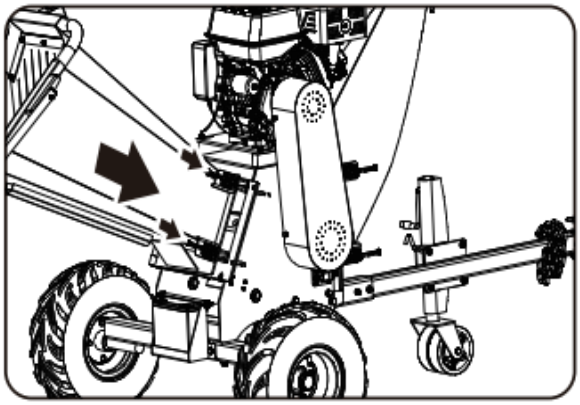

Step 11

Connect the wood chipper plugs. All plugs are the same so it does not matter which plug goes to which connector.

Step 12-1a (Battery cable)

If you wish to use your wood chipper with battery then connect cable to battery and then cable to the plug.

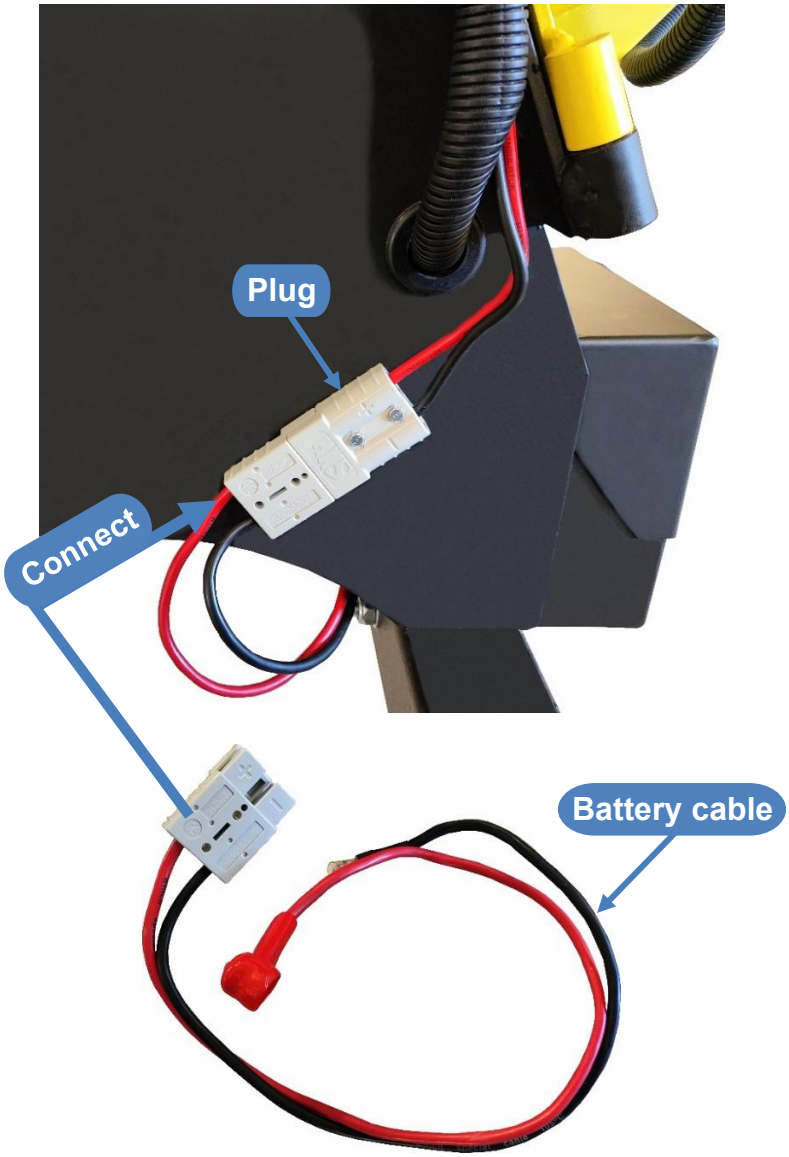

Step 12-1b (Extension cable)

If you wish to use power from your ATV then connect the extension cable to the plug.

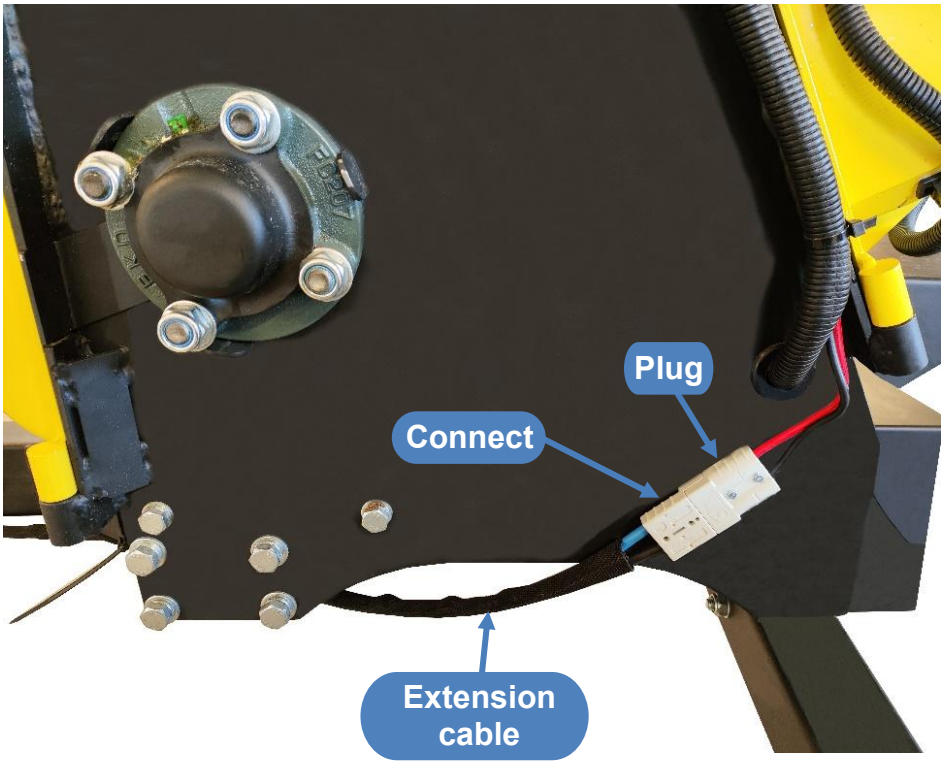

Step 12-2b

Secure the extension cable to the towbar with cable ties.

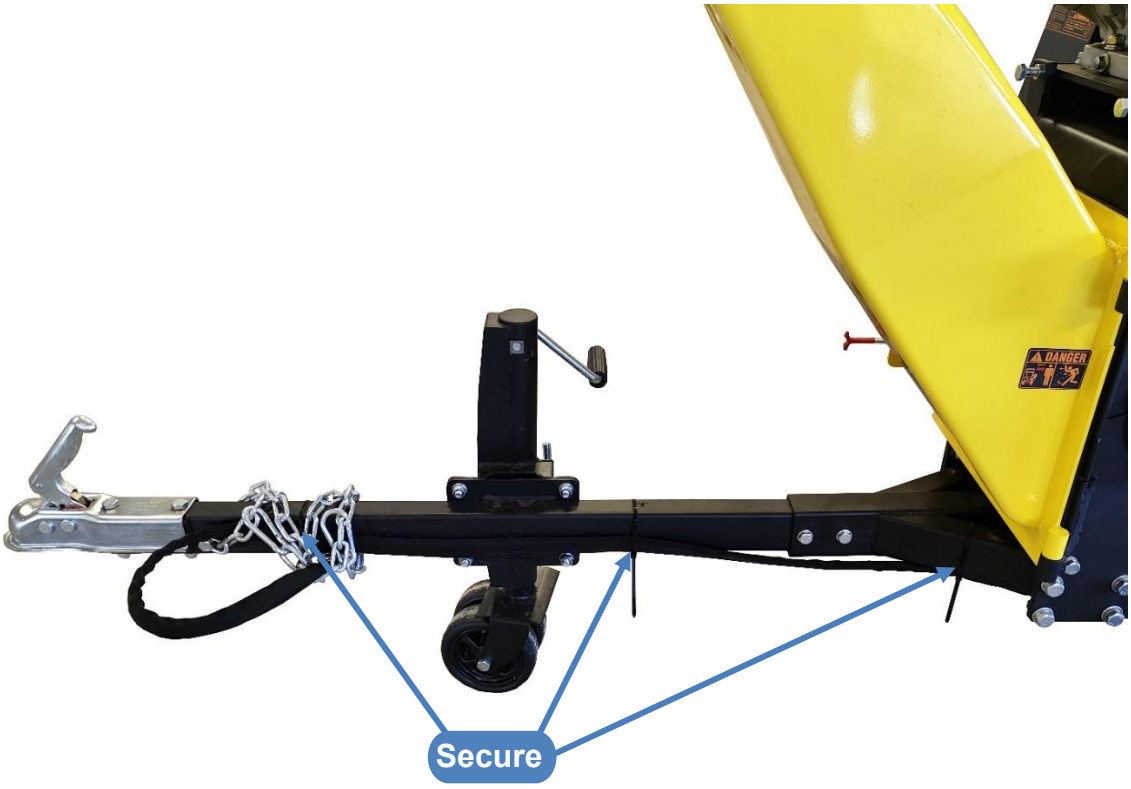

Step 13

Connect the IB-1 power cable to the ATV/UTV battery.

MAINTENANCE

Maintaining your Wood chipper will ensure long life to the machine and its components.

Shut down the engine, wait for all moving parts to come to a complete stop, remove the spark plug wire, and then wait five minutes before performing maintenance on the chipper.

Never use a pressure washer to clean your Wood chipper. Water can penetrate tight areas of the unit and cause damage to spindles, pulleys, bearings, or the engine.

PREVENTIVE MAINTENANCE

1. Turn off the engine. The engine must be cool.
2. Keep the engine's throttle lever in its SLOW position and remove the spark plug wire from the spark plug and secure.
3. Inspect the general condition of the chipper shredder. Check for loose screws, misalignment or binding of moving parts, cracked or broken parts, and any other condition that may affect its safe operation.
4. Remove all debris from the Wood chipper with a soft brush, vacuum, or compressed air. Then use a premium quality lightweight machine oil to lubricate all moving parts.
5. Reconnect the spark plug wire.

REGULAR MAINTENANCE CHECKLIST

Procedure	Before Each Use	Every 8 Hours	Every 40 Hours
Check engine oil level	●	●	●
Check general equipment condition	●	●	●
Check that cutting disk turns freely (with a long stick only)	●	●	●
Visually inspect knife for damage	●	●	●
Check knife and wear plate for sharpness		●	●
Check knife and wear plate attachment screws		●	●
Check for any loose nut and bolts		●	●
Check knife to wear plate gap		●	●
Check belt tension and condition	1st time 1 hour	●	●
Check tire pressure		●	●
Change engine oil	1st time 5 hour		●
Inspect or replace drive belt			●
Inspect or replace spark plug			●
Inspect or replace air filter and precleaner			●

GREASING

There are two bearings, one outside and the other inside the housing. The bearings are greased when they are new, but it is recommended to grease them after a couple hours of use. One or two pumps is sufficient. Be careful not to over grease. Over lubrication can damage the bearings.

CHECK CUTTING DISK

If the machine's cutting disk strikes a foreign object, or if the machine begins to make an unusual noise or vibrates excessively, immediately shutoff the engine. Allow the cutting disk to come to a complete stop. Switch the engine to "off" to avoid any accidental start. Then perform the following steps:

- Inspect for damage
- Repair or replace damaged parts
- Check for any loose parts and tighten to ensure continued safe operation.

Greasing the outside bearing:

1. Open the plastic oil cap.
2. Grease the outside bearing through the grease nipple.
3. Close the plastic oil cap.

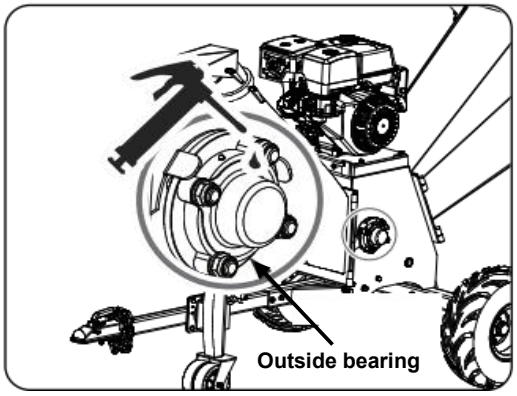

Greasing the inside bearing:

1. Remove the drive belt guard by removing bolts.

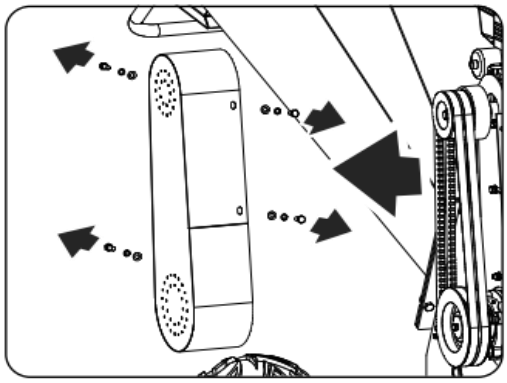

2. Open the plastic oil cap. Grease the inside bearing.
3. Close the plastic oil cap.

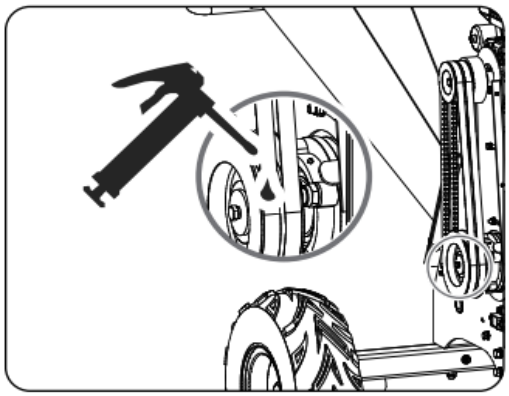

KNIFE AND WEAR PLATE INSPECTION

Routine inspection of the knives for sharpness and wear plate for a sharp edge will ensure that your wood chipper is operating at full efficiency. Using dull knives or a rounded wear plate will decrease performance and cause excessive vibration that will damage the machine and make chipping difficult for the operator.

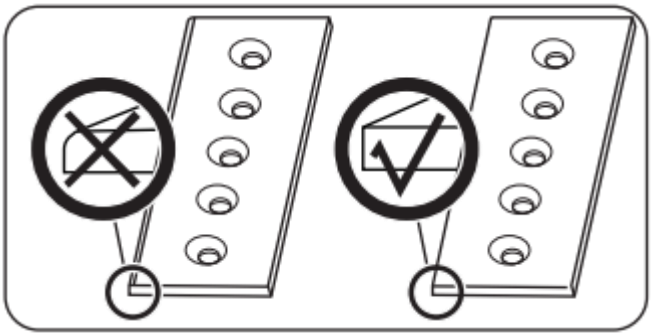

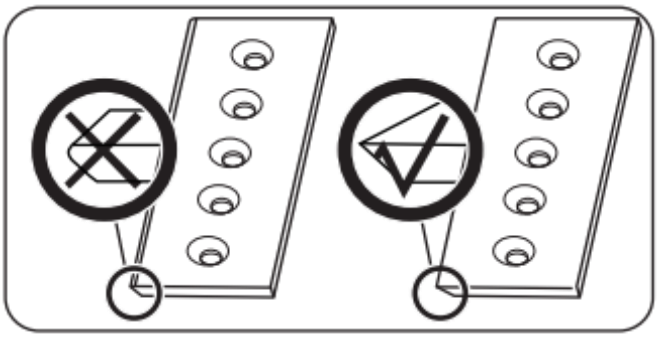

STORAGE

The wood chipper should be stored in a clean, dry area and free of pests and animals. If your Wood chipper will not be used for more than 30 days, follow the steps below to prepare your unit for storage:

1. Drain the fuel tank completely. Stale fuel has high gum content and can clog the carburetor and restrict fuel flow.
2. Start the engine and allow it to run until it stops. This ensures no fuel is left in the carburetor and helps prevent deposits from forming inside, which can damage the engine.
3. Drain the oil from the engine while it is still warm. Refill with fresh oil of the grade recommended in the engine manual.
4. Allow the engine to cool. Remove the spark plug and put 60 ml of SAE-30 high-quality engine oil into the cylinder. Pull the starter rope slowly to distribute the oil. Replace the spark plug.
5. Use clean cloths to clean off the outside of the wood chipper and to keep the air vents free from obstructions.
6. Store your chipper in an upright position in a clean, dry building with good ventilation.

Remove the spark plug and drain all oil from the cylinder before attempting to start the unit after storage.

Do not use strong detergents or petroleum based cleaners when cleaning plastic parts. Chemicals can damage plastics.

Do not store your shredder with fuel in a non-ventilated area where fuel fumes could reach flames, sparks, pilot lights or any ignition sources.

Use only approved fuel containers.

TROUBLESHOOTING

Stop the wood chipper immediately if any trouble occurs. The inspection must not commence until the moving parts of the wood chipper have fully stopped. If the trouble has not been identified, please contact the retailer or manufacturer. Be sure to inform them of the detailed malfunctions and unit model.

Troubleshooting and repairs of the machine must be carried out by qualified operators/professionals.

Trouble	Possible cause	Solution
Engine fails to start	1) Spark plug wire is disconnected 2) Out of fuel or stale fuel 3) Engine and/or Fuel valve is not in ON position 4) Choke lever is not in CLOSE position 5) Blocked fuel line 6) Fouled spark plug 7) Engine flooding	1) Attach spark plug wire securely to spark plug 2) Fill with clean, fresh gasoline 3) Engine and Fuel valve must be in ON position 4) Choke level must be in CLOSE position for a cold start 5) Clean fuel line 6) Clean, adjust gap, or replace 7) Wait a few minutes to restart, but do not prime
Engine runs erratically	1) Spark plug wire is loose 2) Unit running with choke lever in CLOSE position 3) Blocked fuel line or stale fuel 4) Vent plugged 5) Water or dirt in fuel system 6) Dirty air cleaner 7) Improper carburetor adjustment	1) Connect and tighten spark plug wire 2) Move choke lever to OPEN position 3) Clean fuel line. Fill tank with clean fresh gasoline 4) Clear vent 5) Drain fuel tank. Refill with fresh fuel 6) Clean or replace air cleaner 7) Refer to engine manual
Engine overheats	1) Engine oil level low 2) Dirty air cleaner 3) Air flow restricted 4) Carburetor not adjusted properly	1) Fill crankcase with proper oil 2) Clean air cleaner 3) Remove housing and clean 4) Refer to engine manual
Chipping action seems too slow, cutting disk stalls, or no material is discharged when engine is running	1) Engine speed is too slow causing belt to slip 2) Drive belt is loose or damaged 3) Knives are dull or damaged 4) Cutting disk is jammed by debris from the feed chute and discharge chute 5) Discharge chute is clogged	1) Run the engine at full throttle 2) Tighten or replace drive belt 3) Sharpen or replace knives 4) Remove any built-up debris and turn cutting disk with a wooden stick to be sure it turns freely 5) Clean out debris
The belt frays or rolls over the pulley	1) Rotor drive pulley groove may be nicked 2) Drive belts may be stretched 3) Pulleys may be misaligned	1) Check drive belts for wear and hard spots. File off any nicks on the pulley 2) Replace drive belts 3) Adjust pulleys
When chipping, branch seems to vibrate and move about excessively with unusual noise	1) Knives are dull or damaged 2) Knives are not properly seated on the cutting disk 3) The gap between the knives and wear plate is too large 4) Rotor is overloaded with material	1) Sharpen or replace knives 2) Loosen the knife mounting screws, reset the knives and tighten the screws 3) Adjust the gap 4) Allow unit to clear itself before adding more material to the hopper
Chipper knives are hitting the wear plate	1) The gap between the knives and wear plate is set incorrectly	1) Adjust the gap
The machine's wheels track left or right while being towed	1) Low tire pressure	1) Add air to tires

SPARE PARTS REPLACEMENT

BELTS AND CLUTCH REPLACEMENT

Before performing any maintenance procedure or inspection, stop the engine, wait at least five minutes to allow all parts to cool. Disconnect the spark plug wire, keeping it away from the spark plug.

Step 1 Remove the drive belt guard bolts.

Step 2 Remove the clutch bolt together with washers and centering bush.

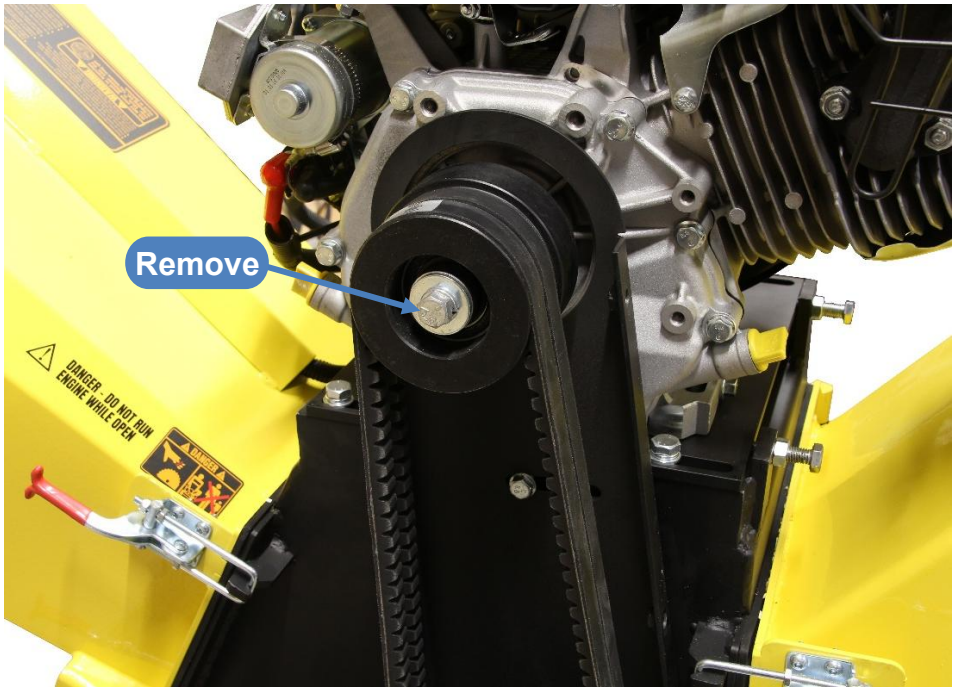

Step 3 Release belt side engine bolts and belt tensioning bolts (do not remove).

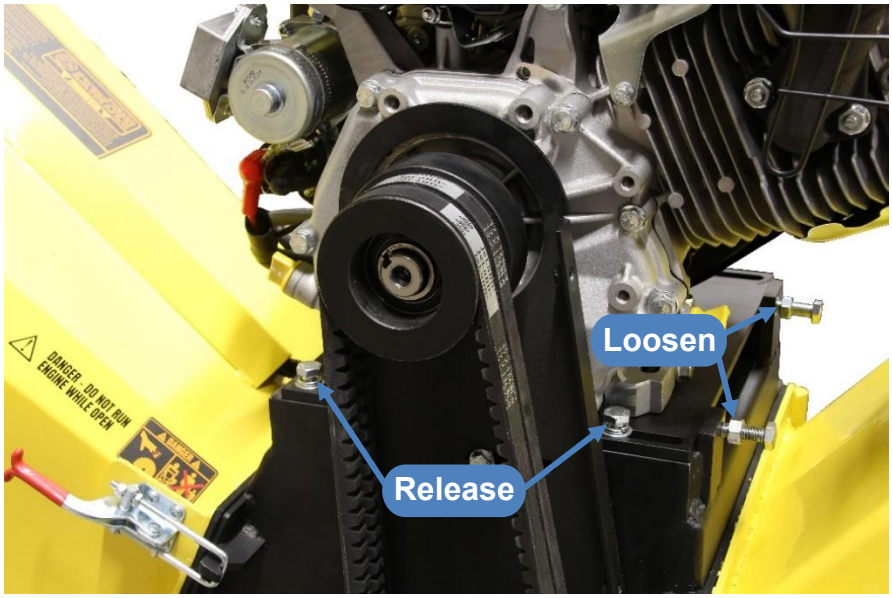

Step 4 Remove the two remaining engine bolts on the other side of the engine. Removing these bolts will simplify clutch removal and installation.

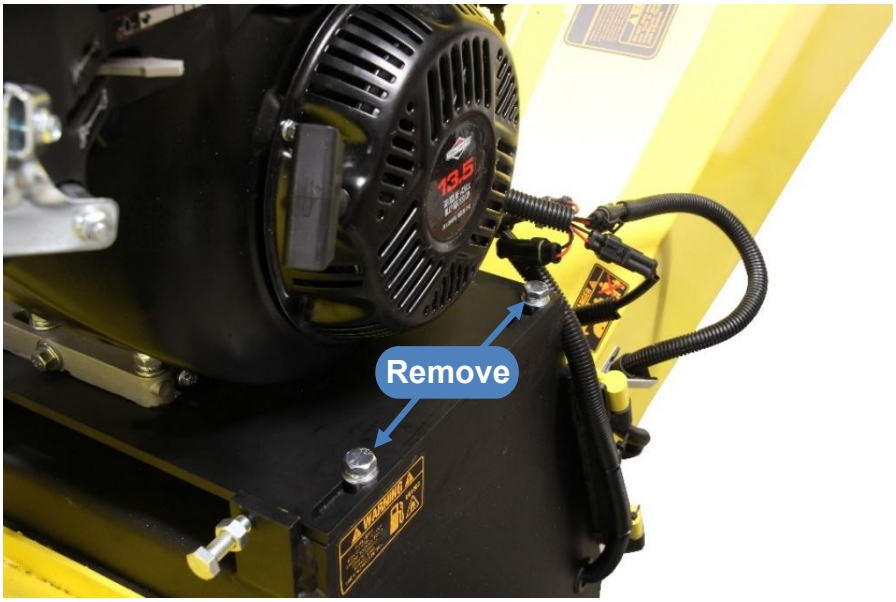

Step 5 Place a flat-head screwdriver between the engine mounting plate and the baseplate to lift the engine.

Step 6 Remove the clutch together with drive belts. Use puller if needed.

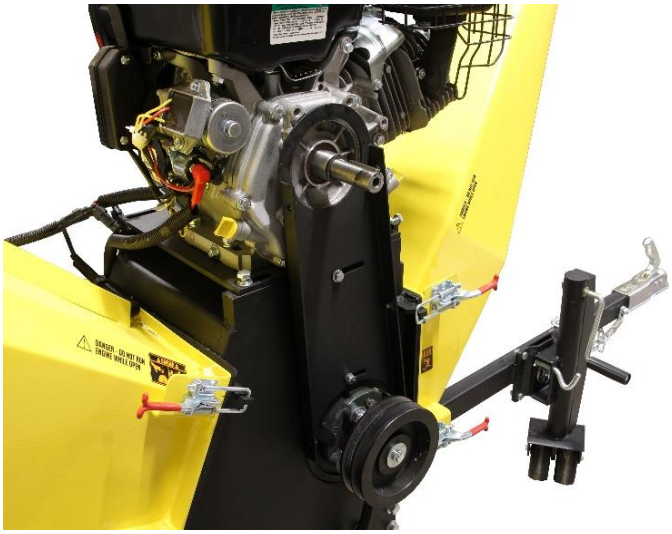

Step 7 Re-install the spacer and key on the engine shaft.

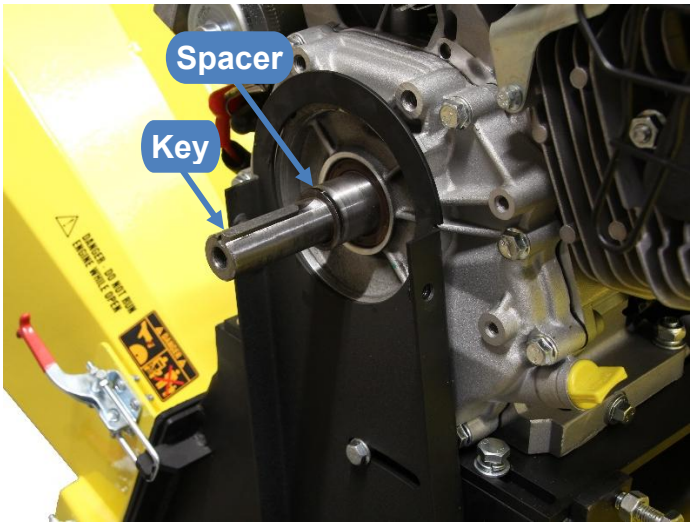

Step 8 Install a new clutch and belts. Secure the clutch with bolt, washers and centering bush. We recommend to lift the engine mounting plate (see Step 5) and push the clutch with belts to the engine shaft. Re-install engine bolts.
NB! We recommend doing this step with two people!
NB! Use thread lock glue on the bolt!

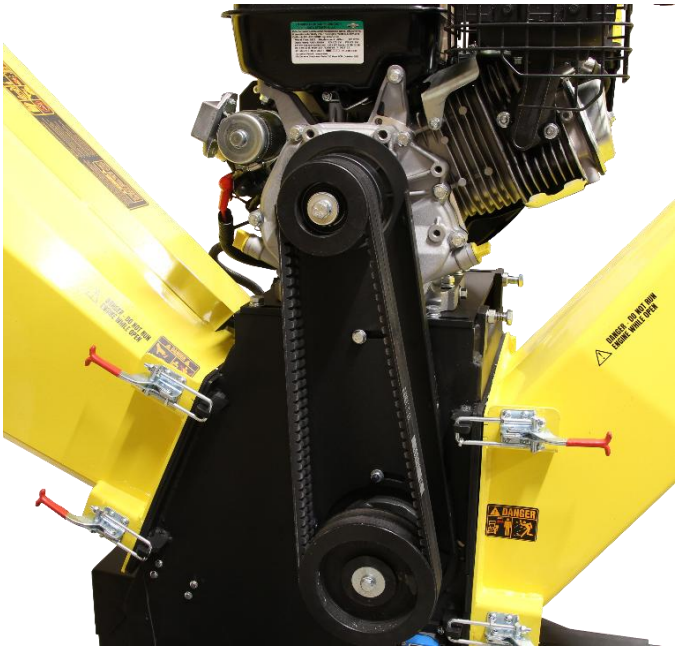

Step 9 Check the belt tension. Adjust the belt tensioner bolts to achieve the correct tension. The correct tension is achieved when it is possible to compress the belts by hand approximately 10 mm (3/8"). Once the correct tension is reached, secure the tensioning bolt with the nut.

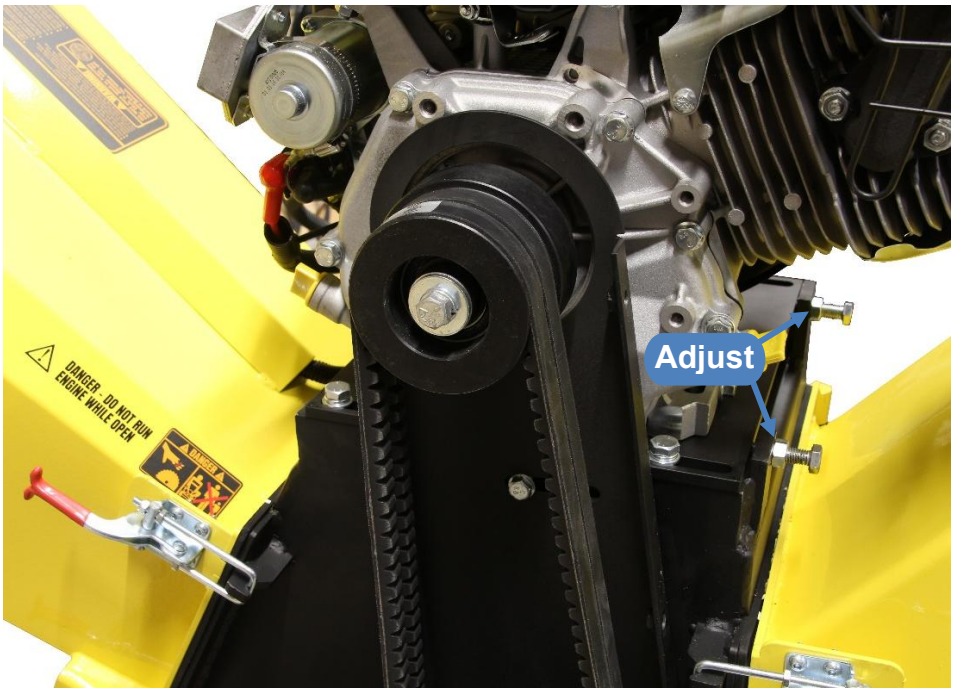

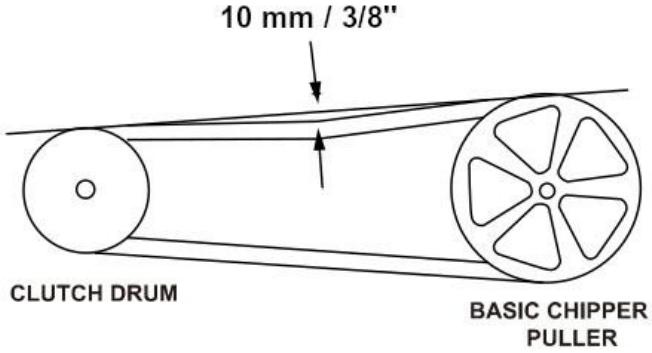

Step 10 Tighten engine bolts (4 pcs.).

Step 11 Re-install drive belt guard.

KNIVES AND WEAR PLATE REPLACEMENT

Before performing any maintenance procedure or inspection, stop the engine, wait at least five minutes to allow all parts to cool. Disconnect the spark plug wire, keeping it away from the spark plug.

Be careful and wear gloves when working near the knives.

The wood chipper knives may only be sharpened by a professional workshop. Doing it yourself may damage the device and result a personal injury to the user.

This wood chipper is equipped with two chipper knives mounted on the cutting disk. When the knives get dull or show visible nicks, the machine will lose its self-feeding action and the material has to be pushed in. Often it comes out in long strips.

Step 1 Remove the drive belt guard bolts.

Step 2 Release the two lock latches and open the discharge chute.

Step 3 Use 13 mm socket wrench to turn pulley clockwise until you see knife completely.

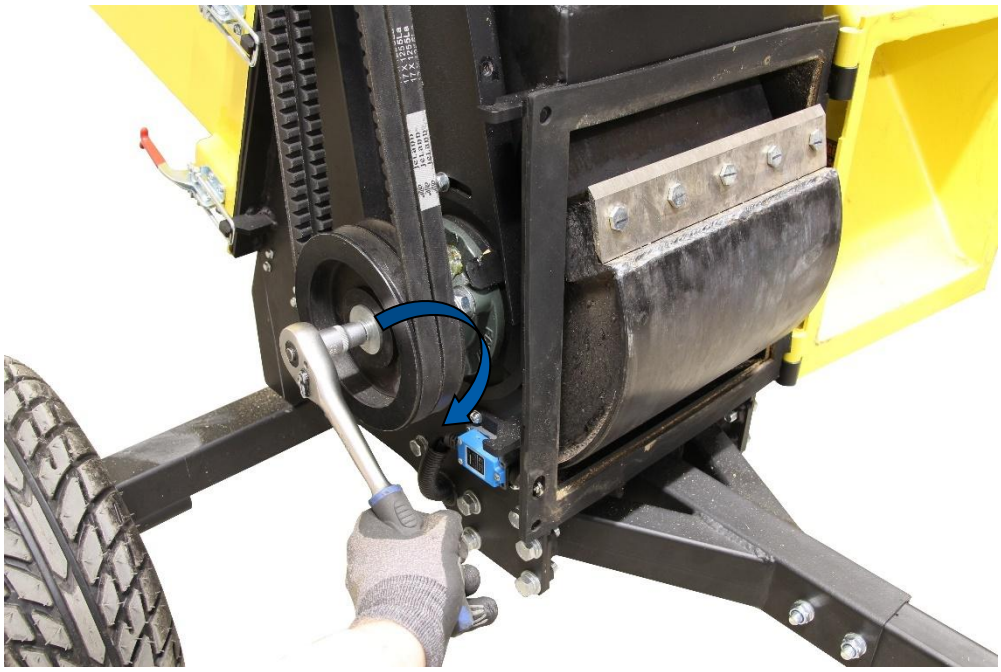

Step 4 Remove the dull or damaged knives and visually inspect the knives mounting area. Make sure they are clean and that the placement knives will be able to mount flush against the cutting disk. Remount new or sharpened knives with the knife edges facing up. **NB! Use thread locking glue on bolts, torque the bolts to 50Nm/37ft-lb, torque in sequence from 1 to 5.**

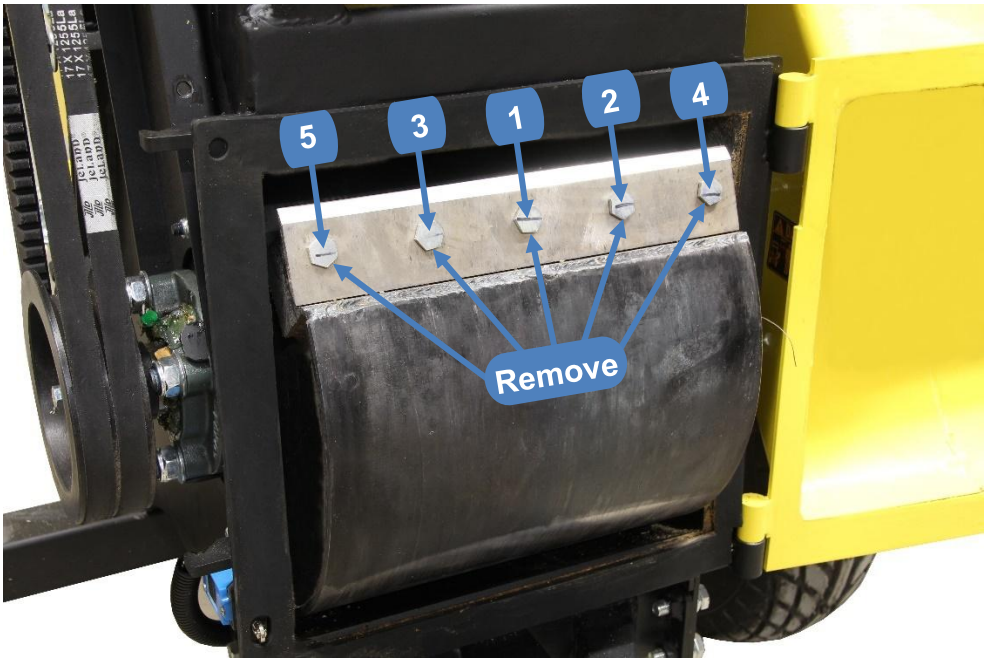

If the cutting disk surface is not cleaned properly and the knives are not mounted flush on the cutting disk, the knives could crack when the hardware is tightened.

Step 5 Repeat steps 3-4 to replace second knife.

Step 6 Close discharge chute and open the feed chute by releasing the two lock latches.

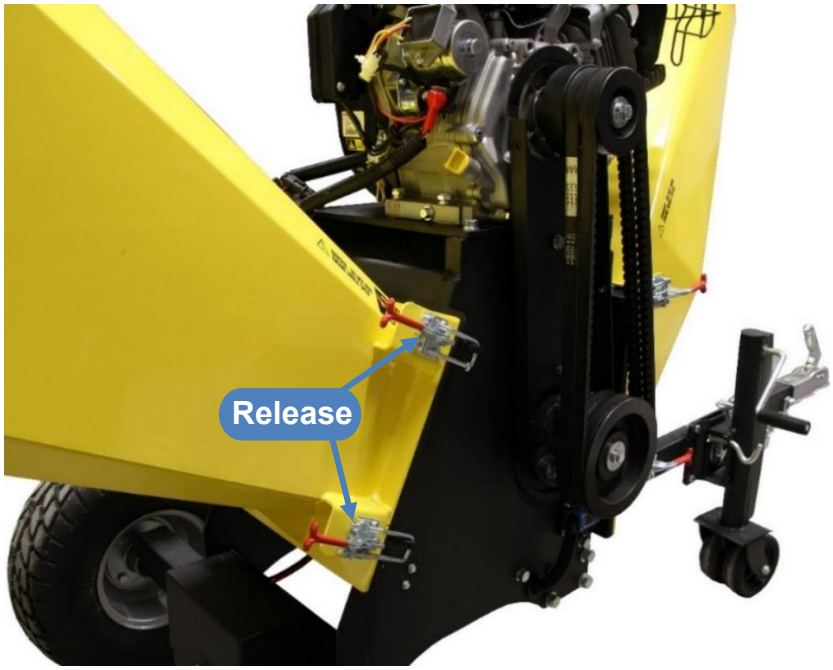

Step 7 Turn pulley clockwise (see step 3) until you have enough space to hold wear plate and distance plate. Remove wear plate bolts. **NB! Before removing last bolt, hold wear plate and distance plate so they can't fall under the roller!**

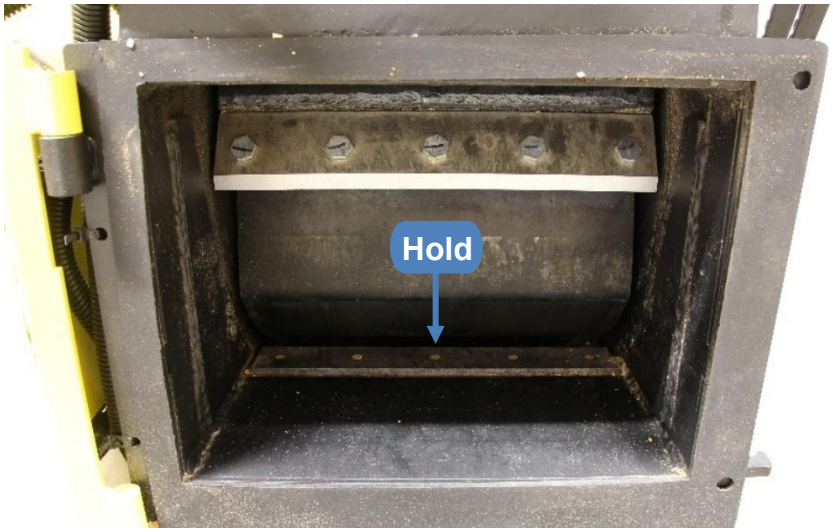

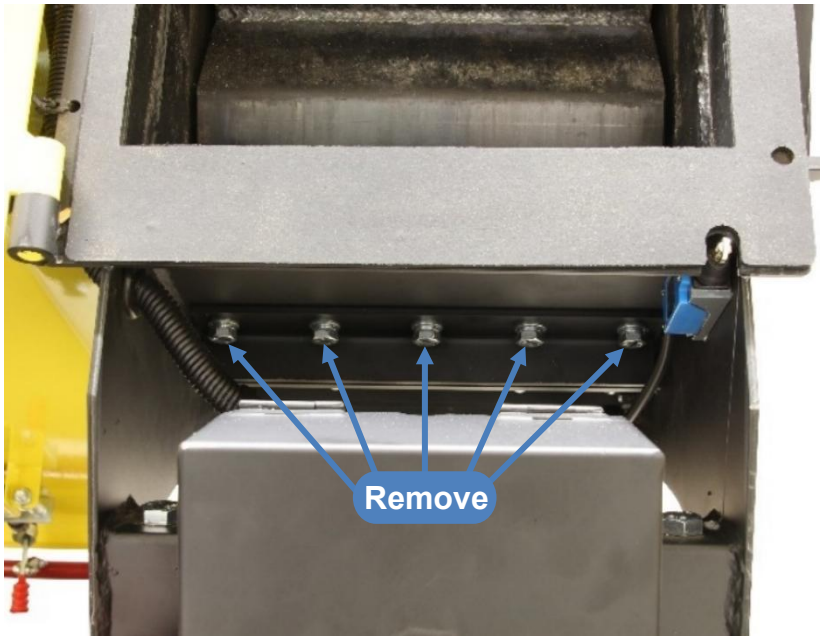

Step 8

Install adjusting plate, distance plate and new wear plate. Watch that the wear plate chamfered edge stays towards the roller and distance plate below wear plate. **NB! Do not tighten bolts completely!**

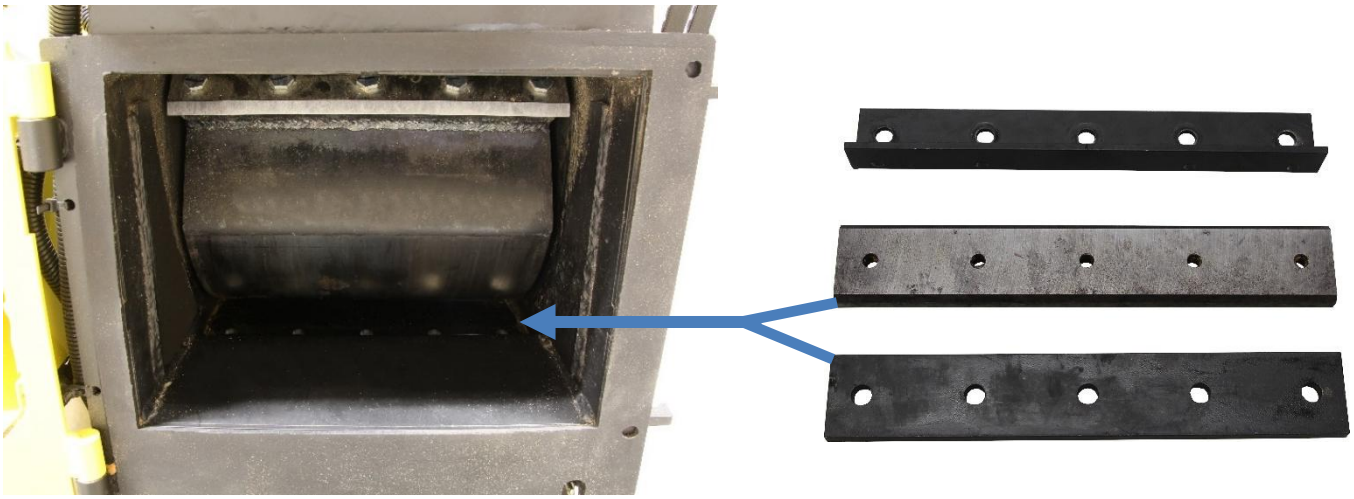

Step 9

Rotate the roller to the intersection of the lower and upper knives with a long wooden stick. The clearance between the knives and wear plate should be approximately 3 mm. Fix the distance of the adjusting bolts with the nuts under the device. When achieved the correct distance, tighten the wear plate bolts. **NB! Use thread locking glue on bolts.**

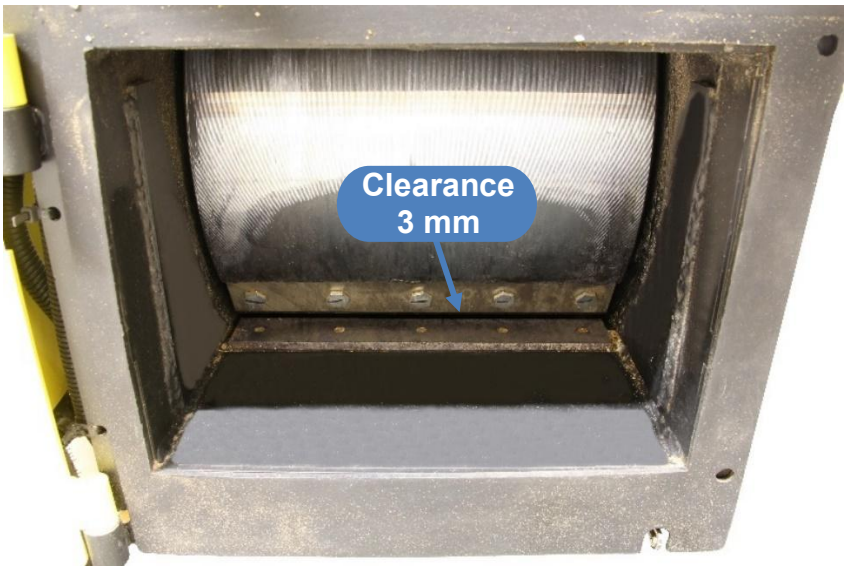

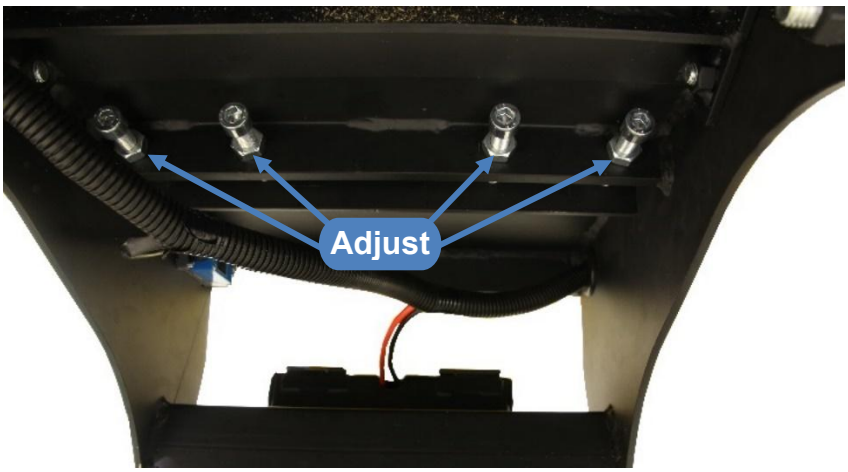

Step 10

Close feed chute and re-install drive belt guard.

76.7000 Wood chipper

PARTS LIST

Pos.	Description	Amount
1	Base frame	1
2	In-feed to frame rubber	1
3	Discharge to frame rubber	1
4	Spring washer 10	14
5	Flat washer 10	39
6	Hex bolt M10x35	5
7	Roller housing	1
8	Bearing base plate <R>	1
9	Anvil distance plate	1
10	Bearing base plate <L>	1
11	Frame baseplate	1
12	Bearing UCFC207	2
13	Flat key B10x8x30	1
14	Pulley	1
15	Pulley gasket	1
16	Limit switch plate	1
17	Limit switch	2
18	Anvil adjusting plate	1
19	Anvil wear plate	1
20	Blade	2
21	Cover sleeve	2
22	Bearing cover	1
23	Engine mounting plate	1
24	Taper lock bushing	1
25	Drive belt 17x1255La	2
26	Screw M5x14	4
27	Hex bolt M10x25	10
28	Hex bolt M10x25	2
29	Spring washer 8	10
30	Screw M10x30	8
31	Nyloc nut M14	10
32	Small washer 14	8
33	Hex bolt M5x16	4
34	Spring washer 5	4
35	Flat washer 5	4
36	Hex bolt M6x16	4
37	Spring washer 6	4
38	Flat washer 6	4
39	Flat washer 8	10
40	Nyloc nut M8	1
41	Hex screw M10x60	4
42	Hex nut M10	6
43	Hex bolt M10x60	2
44	Engine	1
45	Clutch centering bush	1
46	Clutch washer	1
47	Clutch	1
48	Flat key	1
49	Hex bolt 3/8-24x25.4	1
50	Nyloc nut M10	13
51	Bolt M10x50	4
52	Inner belt cover	1
53	Drive belt guard	1
54	Hex bolt M8x20	4
55	Wheel axle	1
56	Axle flange for 19*7-8 tyre	2
57	Dust cap	2
58	19x7.00-8 tubeless tire	2
59	Small washer 24	2

60	Split pin 4x45	2
61	Ball bearing 6205-2z	4
62	Bearing seal 30x52	2
63	Crown nut M24	2
64	Hex bolt M14x140	2
65	Flat washer 14	4
66	Hex bolt M10x25	12
67	Nyloc nut M8	8
68	Discharge chute	1
69	Clamp 431	4
70	Nyloc nut M6	16
71	Hex screw M6x16	16
72	Discharge chute connector tube	1
73	Discharge chute	1
74	Upper expulsion chute handle M8x15	4
75	Battery holder	1
76	Battery	1
77	Clamp 4001	1
78	Hex bolt M10x80	2
79	Cross head screw	2
80	Nyloc nut M4	2
81	Flat washer 8	4
82	Spring washer 8	5
83	Flat washer 12	2
84	Coupler	1
85	Chain	1
86	Hex bolt M12x80	2
87	Flat washer 12	10
88	Nyloc nut M12	2
89	Hex bolt M10x70	3
90	Hex bolt M12x35	8
91	Spring washer 12	8
92	Towbar mount	1
93	Towbar	1
94	Double jockey wheel	1
95	Feed chute	1
96	Rubber mounted plate	1
97	Emergency stop button holder	1
98	Emergency stop button	1
99	Emergency stop bar	1
100	Rubber chip baffle	1
101	Emergency stop bar connecting rod	2
102	Emergency stop bar plate	1
103	Clamp TC3-10	1
104	Emergency stop bar end cap	2
105	Spring 016*01.5*115	2
106	Limit switch MT8112	1
107	Nyloc nut M6	6
108	Hex bolt M8x45	2
109	Hex nut M8	6
110	Hex bolt M8x16	2
111	Hex bolt M8x20	5
112	Hex nut M10	1
113	Hex nut M12	4
114	Spring washer 5	4
115	Cross screw M5x16	4
116	Hex bolt M6x25	2
117	Hex screw M8x20	4
118	Hex bolt M12x110	2
119	Bearing base plate	2
120	Hex bolt M10x40	1

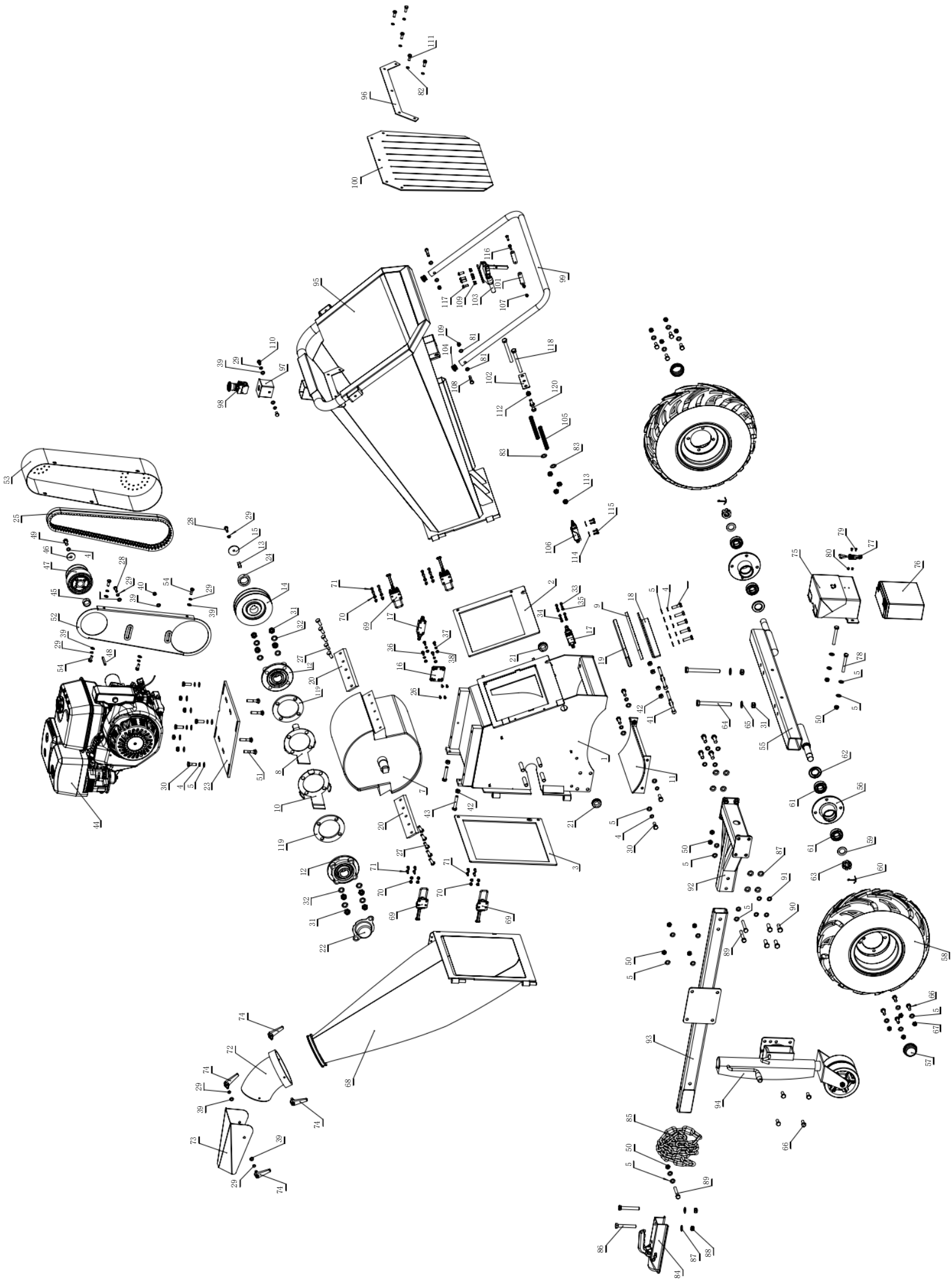

IRON BALTIC OÜ
Joa tee 17
Vääna 76903
Estonia / Europe

+372 6 533 711
sales@ironbaltic.com

www.ironbaltic.com
www.facebook.com/ironbaltic
www.youtube.com/user/ironbalticltd